courtesy of 500Eboard.com

Mercedes-Benz

Service

Model 124.036 (500 E)

Introduction into service

Mercedes-Benz AG · Vertrieb Personenwagen · D-7000 Stuttgart 60

courtesy of 500Eboard.com

Printed in Germany

All rights reserved, including reprinting,
reproduction or translation,
in whole or in part.

Order No. 6510 1081 02
1290 2,5 ru

courtesy of 500Eboard.com

Model 124.036 (500 E) expands the model series 124 by a sportive version.

Product features as against model 124.031 (300 E-24) are:

- 8-cylinder engine with gasoline injection system LH (LH = hot wire air flow measurement).
- Tracks widened at the front by 37 mm, 38 mm at the rear.
- Wide tires 225/55 ZR 16.
- Light-alloy rims 8 J x 16 with 8-hole design.
- Wings newly designed in the area of the wheel cutouts.
- Bumper trim panels front and rear adapted to the wings.
- Fog lamps integrated in the front bumper cover panel.

This introductory brochure, merely explaining the changes as against model 124.031 (300 E-24), is intended for the technical personnel entrusted with the maintenance and repair of Mercedes-Benz cars. Its contents is only valid until the remaining workshop literature (repair instructions on microfilm, electrical wiring diagrams etc.) have been updated.

All repair work, adjusting values and maintenance operations not included here should be taken from the existing technical documentation.

Mercedes-Benz AG
Vertrieb Personenwagen

January 1991

courtesy of 500Eboard.com

Contents

Model and unit survey 7

Survey of literature 8

Vehicle views 9

Engine views 10

Maintenance operations 11

Technical highlights 16

01 Crankcase, cylinder head, crankcase ventilation
Crankcase 24
Engine number 24
Cylinder heads 25
Timing case cover 25
Oil pan 25

03 Crank assembly
Connecting rods 26
Crankshaft 26
Pistons 27
Piston pins 27

05 Valve train, valves
Valves 28
Valve collet 28
Valve guides 28
Camshafts 29
Camshaft adjuster 29
Chain drive 29

07.4 Gasoline injection system LH
General 30
Influence factor on control unit LH (N3/1) 31
Function diagram gasoline injection system LH 32
Arrangement of components 33
Construction and function 36
1. Fuel supply 36
2. Construction and function of hot wire air flow sensor 39
3. Control of injection valves and fuel metering under various operating conditions 42
4. Influence factors for the control of the injection system LH 46
5. Functions in the control unit LH . . . 49

13 Belt drive 59

14 Intake manifold, exhaust manifold, emission control system
Intake manifold 60
Exhaust manifold 61
Air injection, exhaust gas recirculation, vacuum supply 62

15 Electrical system, engine
Electronic ignition system with ignition characteristic control and anti-knocking control (EZL/AKR) 64
Arrangement of components 64
Block wiring diagram EZL/AKR 66
Control unit EZL/AKR 67
Firing order 69
Camshaft position sensor 69
Catalytic converter heating 70
Fuel shutoff in the case of ignition faults 70
Engine torque reduction with ASR controlled operation 71
Diagnosis fault storage 71
Alternator 73
Starter motor 73

18 Engine lubrication, engine cooling
Oil pump 74
Oil pressure sensor 74
Engine oil cooler 74
Oil dipstick guide tube 74

courtesy of 500Eboard.com

20 Engine cooling, coolant hoses, radiator
Radiator 75
Coolant pump 75
Viscofan clutch 75
Fan shroud 75
Inlet fitting heater return 75

22 Engine suspension
Front engine mounts 76
Engine support bracket 76
Rear engine mounts 76

27 Automatic transmission
Starter lockout switch 77
Center shift 77
Adjusting control pressure cable 77
Installation survey, testing and pressure values 78
Shiftpoints in selector lever position "D" 78

30 Electronic accelerator
Arrangement of components 79
Function electronic accelerator 81
Block wiring diagram electronic accelerator 83
Idle speed control 84
Information on towing, test and repair jobs 86

31 Trailer operation 87

32 Spring suspension
General 88
Damper strut, front axle 88
Level control 89
Damper strut, rear axle 89
Torsion bar stabilizer 89
Allocation springs-rubber mounts 89

33 Front axle
General 90

35 Rear axle
Deviations on wheel guide 91
Rear axle support 91
Gear set and rear axle shaft 92

40 Wheels, chassis alignment
Survey rims and tires 93
Light-alloy rim 93
Steel plate rim 93
Wheel bolt 94
Wheel lock for light-alloy rim 94
Tire inflating pressure 94
Anti-skid chains 94
Chassis alignment (testing and adjusting values) 95

41 Drive shaft 96

42 Brakes
Front wheel brake 97
Rear wheel brake 97
Brake pads, brake caliper, brake disk 98
Tandem brake master cylinder 98
Brake booster 98
Brake fluid 98
Acceleration skid control (ASR III)
Basic equipment 99

46 Steering
Steering gear 100
Jacket tube/Steering spindle 101
Steering wheel 101
Steering geometry, steering linkage . 101

47 Fuel system
Fuel tank 103
Fuel evaporation system 103

49 Exhaust system 105

courtesy of 500Eboard.com

Contents

54 Electrical system, equipment and instruments
Battery 106
Module box (F23) 109
Allocation of control units 111
Removal, reinstallation of control units 111
Test coupling for diagnosis 38-pole (X11/4) 113
Instrument cluster 114
Two-tone fanfare 114

60 Body
Body in white 116
Accident repair using straightening angle sets 116

67 Panes and windows 117

68 Interior trim 117

72 Doors 117

82 Electrical system body
Radio 118
Lighting 119
Windshield washer system 120
Interior lighting 120

83 Air conditioning
Air conditioning automatic temperature control 121

86 Emergency equipment
Fire extinguisher 121

88 Attachments
Bumper 122
Front wing 122
Side trim panels 123
Trunk 123

91 Seats, restraint systems
Seats 124
Head restraints 124

98 Paintwork
Range of colors 125
Plastic attachments 125
Light-alloy rims 126
Allocation of contrast colors for the plastic attachments to the outer skin metallic paint finish 126

Special tools 127

Test program acceleration skid control (ASR) 129

courtesy of 500Eboard.com

Model survey (extract)

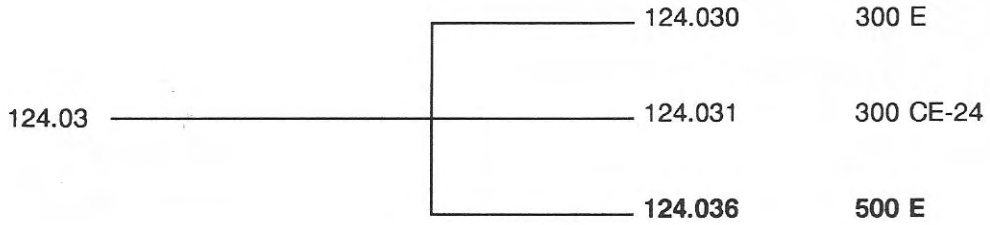

Unit survey

Sales designation	Model	Engine	Manual transmission	Automatic transmission	Power steering gear
500 E	124.036	119.974	–	722.365	765.921

courtesy of 500Eboard.com

All repair work, test and adjusting values as well as test and adjusting operations not included should be taken from the following table.

Engine

Designation	Diagnosis manual engine	Repair instructions	Electrical wiring diagrams
Test and adjusting values	Volume 1	–	–
Test and adjusting operations	Volume 1	–	–
Diagnostic testers	Volume 1	–	–
Diagnosis paths	Volume 1	–	–
Test programs	Volume 2	–	–
Assembly jobs	–	Engine 119 combustion LH injection	–
Adjusting control	–	Engine 119 combustion LH injection	–
Electrical wiring diagrams	–	–	Volume 4

courtesy of 500Eboard.com

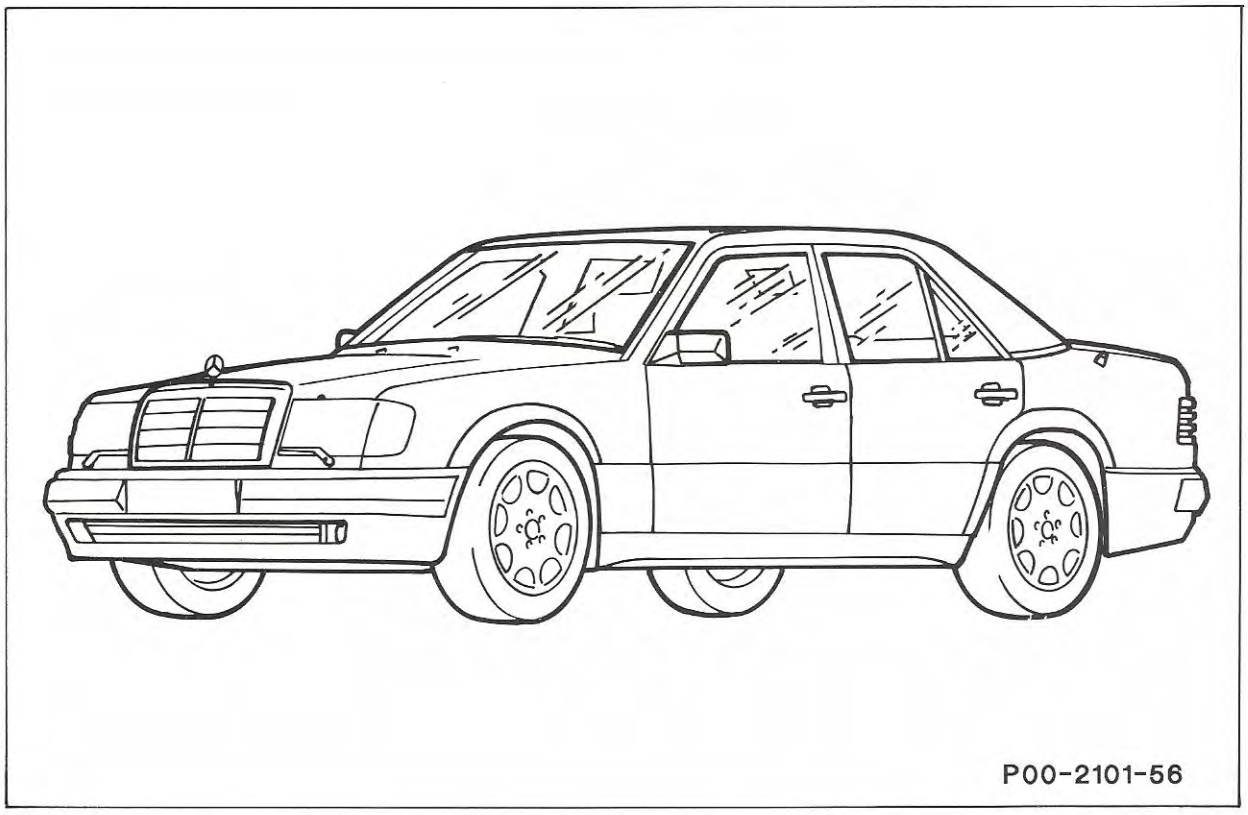

P00-2101-56

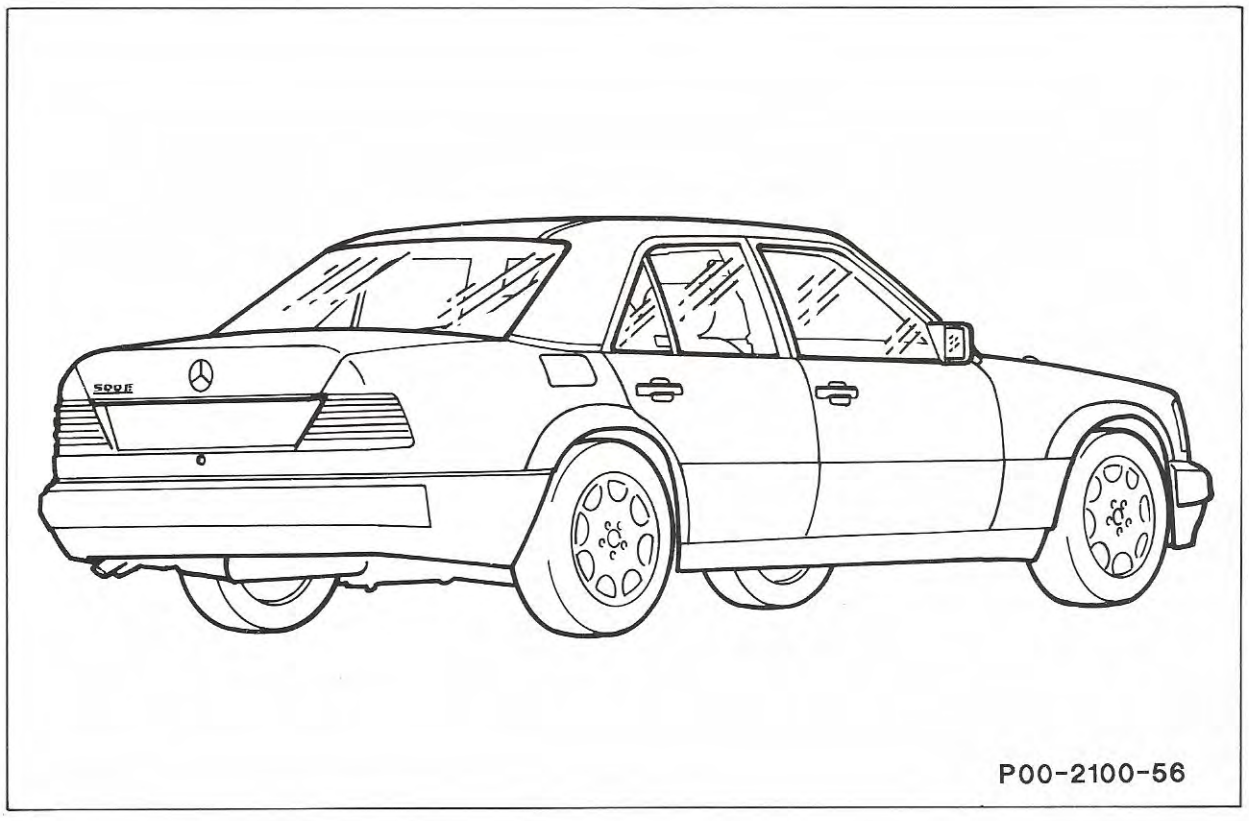

P00-2100-56

courtesy of 500Eboard.com

All maintenance operations not included here are identical to those for model 124 or engine 119.

Revisions/Innovations

The operation 3022 "Lubricating engine control linkage and control shafts, checking for easy operation and wear" is no longer included in the **service**.

The operation 0750 "Checking, readjusting idle speed/lambda control" has been **newly** included in the scope of maintenance.

courtesy of 500Eboard.com

0750

Checking, readjusting idle speed/lambda control

Engine 119 with LH injection system

every 20 000 km

Test values

Engine	Version	Idle speed rpm [1]	Lambda control %	Ignition timing **with** vacuum Test value °crank angle BTDC at idle speed [1]
119	CAT	600–750	50 ± 10 [1]	14–18

[1] Conduct test program if deviating (Diagnosis Manual Engine, Volume 2).

Special tool

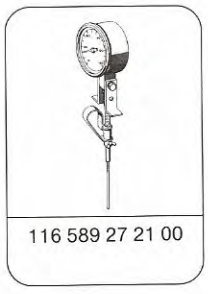

116 589 27 21 00

Commercially available testers

Digital tester	e.g. Bosch, MOT 002.02
	e.g. Hermann, D 421
Lambda control tester	e.g. Hermann, L 115
Twin socket	e.g. Hermann, ECD 53

courtesy of 500Eboard.com

0750

Note
Do not pull off crankcase breather for idle speed adjustment!

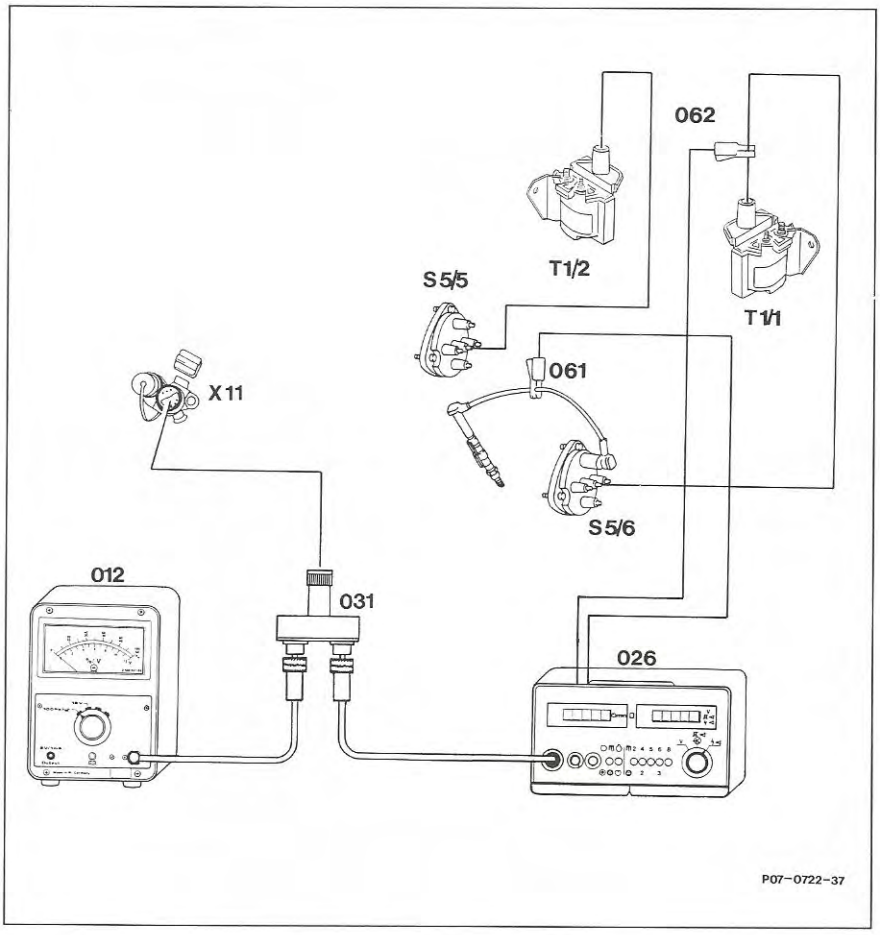

Testing

- Connect testers:
  - Digital tester
  - Lambda control tester
  - Remote oil thermometer
- Switch off refrigerant compressor.
- Place selector lever in position "P".
- Run engine oil temperature up to approx. 80 °C.
- Check if the throttle valve lever contacts the idle speed stop (stop position is audible).

courtesy of 500Eboard.com

⚠
With ignition switched on, do not actuate control linkage in the engine compartment as faults would not be interpreted as being plausible and stored in the control unit LH.

- Check ignition timing (only ignition circuit of coil T1/1).
  Adjust digital tester to 4 cylinders. Connect kilovolt clamp (062) to ignition coil (T1/1). Connect trigger clamp (061) to ignition cable 1.

  With deviating test value, conduct test program (Diagnosis Manual Engine, Volume 2).
  Note
  Test program is not included in scope of maintenance.

- Check idle speed. With deviating idle speed, conduct test program (Diagnosis Manual Engine, Volume 2).
  Note
  Test program is not included in scope of maintenance.

- Check lambda control. Push test signal selector switch on Hermann lambda control tester in position 100 % ⏚.

courtesy of 500Eboard.com

Check impulse ratio at idle speed. Set value
50 % ± 10

Note

The indicated value should fluctuate during the measurement. If a constant value is indicated, the lambda control is faulty (Diagnosis Manual Engine, Volume 2).

- Check control linkage.
  With throttle valve lever in idle speed stop position, the tips (arrow) on angle lever and control lever must be exactly opposite.
  Adjust on connecting rod (2) (left-hand, right-hand threads), not included in scope of mainte-nance (see Repair Instructions 30–1010).

- Check continuous engine operation. For this purpose place selector lever in driving po-sition, switch on refrigerant compressor, fully lock power steering, the engine must run smoothly.

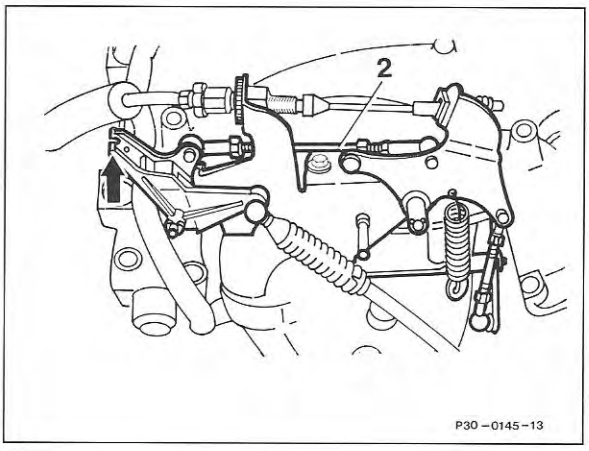

courtesy of 500Eboard.com

Engine, electrical system engine, fuel system, exhaust system

The mechanical construction of the engine 119.974 is largely identical to engine 119.960 of model 129.

The gasoline injection system LH with relevant components is new.

Major engine data

Engine	Compression ratio ε	Piston displacement cm^3	Bore/ Stroke mm	Version	Output kW at rpm	Torque Nm at rpm
119.974	10.0	4973	96.5/85.0	KAT 1)	240/5700	480/3900

1) Without CAT only for export into countries where supply with unleaded fuel is not guaranteed.

01 Crankcase

- Deck height of crankcase changed and standardized with the 4.2-liter cubic capacity variant.

03 Crank assembly

- Shorter connecting rod with identical stroke due to the lower deck height of the crankcase.

05 Valve train, valves

- Valve stem dia. of intake and exhaust valves reduced to 7 mm.
- Valve collets with 3 retaining beads.
- Camshafts with changed timing.
- Timing chain length, tension and sliding rails adapted to lower crankcase.

courtesy of 500Eboard.com

07.4 Gasoline injection system LH

- Measurement of intake air mass flow by means of a hot wire air flow sensor (no baffle plate included).
- The fuel is metered by means of electro-magnetically controlled injection valves. Injection takes place according to the firing order.
- The fuel pressure is controlled by pressure controller as a function of intake manifold vacuum while the injected quantity is determined by the injection time.
- There is no idle speed adjuster. Idle speed is controlled by the adjusting element electronic accelerator.
- No cold starting valve included.
- Data exchange via serial data bus (CAN) between
  - control unit EZL/AKR
  - control unit LH
  - control unit electronic accelerator
  - control unit ABS/ASR
- Fuel shutoff with faulty ignition to protect the catalytic converter (phased-in production breakpoint).
- Control unit LH with fault memory. Impulse output via test coupling for diagnosis 38-pole, jack 4.

13 Belt drive

- 8-grooved poly-V-belt with identical length, both versions (with and without air pump).

courtesy of 500Eboard.com

14 Intake manifold, exhaust manifold, emission control system

- Intake manifold with longer swing pipes.
- Exhaust manifold adapted to space conditions in engine compartment.
- For CAT version, air injection and exhaust gas recirculation.

15 Electrical system engine (ignition system, alternator)

- Electronic ignition system with ignition characteristic control and anti-knocking control (EZL/AKR).
- Ignition control unit with fault memory (permanent store), fault impulse output via test coupling for diagnosis 38-pole, jack 17.
- Data exchange in engine management by means of linked communication via serial data bus (CAN) between:
  - control unit EZL/AKR
  - control unit injection system LH
  - control unit electronic accelerator
  - control unit ABS/ASR
- Idle speed and full load signal by set value potentiometer in adjusting element of electronic accelerator.
- Camshaft sprocket with two position indicators for faster cylinder recognition.
- For catalytic converter heating during warming up, temperature-dependent ignition retardation.
- Fuel shutoff for the cylinders of one ignition circuit in the case of faulty ignition by means of control unit LH (phased-in production breakpoint).
- Engine torque reduction during ASR controlled operation due to brief ignition retardation.
- 120 A compact alternator NC 14 V60/120 A.

courtesy of 500Eboard.com

18	**Engine lubrication**	• Oil suction strainer and oil level sensor position changed. • Air oil cooler for engine oil cooling.
20	**Engine cooling**	• Transverse radiator with 29.8 dm^2 cooling surface. • 2 electric auxiliary fans in front of condenser of standard air conditioner. • Fan shroud can be split due to radial ring.
22	**Engine suspension**	• Hydraulically dampened front engine mounts with air cooling. • Round rubber mounts rear on die-cast aluminum cross member.
30	**Control, speed control systems (cruise control)**	• Functions of electronic accelerator, cruise control and idle speed control incorporated into one control unit (N4/1). • Idle speed control is directly by way of the control element with throttle assembly (M16/1), i.e. no idle speed adjuster. • Control unit with fault memory. To be read out via the 38-pole diagnosis coupling (X11/4). • Serial data bus (CAN) for exchange of information between control unit LH, control unit EZL/AKR and control unit ABS/ASR.
47	**Fuel system**	• Fuel tank with 90 liter capacity, 11.5 liter of which are reserve.

courtesy of 500Eboard.com

49 Exhaust system

- Two-flute catalytic converter with 5.8 liter capacity.
- Monoliths are held by swell mats which act as heat insulators at the same time.
- Front pipe system insulated.

54 Electrical system

- Maintenance-free battery 12 V 92 Ah accommodated in trunk.
- Control units combined in module box in engine/unit compartment.
- Test coupling for diagnosis (38-pole) integrated in module box.

Chassis

27 Automatic transmission

- Transmission 722.3.
- New starter lockout switch with 2 additional plugs for identification of selector lever position for cruise control.
- Center shift with individual gear display.

31 Trailer operation

- **Not** intended for trailer operation.

32 Spring suspension

- Vehicle level lowered by 23 mm and increased weight resulting in changes on the following parts:
  - Damper strut, spring strut
  - Front and rear springs
  - Torsion bars
- Damper struts on the front axle and spring struts on the rear axle are each provided with a tension stop spring.
- Level control on the rear axle is standard.

courtesy of 500Eboard.com

33 Front axle

- Front axle corresponds largely to that of model 129.
- Rear control arm bearings are interconnected by means of a strut.
- Track 37 mm wider.

35 Rear axle

- Detail changes on rear axle support and rear center piece suspension.
- 4-arm joint flange on drive pinion with 110 mm pitch circle diameter.
- Rear axle shafts with 32 mm diameter and with larger inner ring joint.
- Rear axle shaft flange lengthened by approx. 2 mm at the rim centering.
- Camber strut with closing panel in the area of the open box section.
- Track 38 mm wider.

40 Wheels, chassis alignment

- 8-hole light-alloy rims standard with tires of size 225/55 ZR 16.

42 Brakes

- Front wheel brake with 4-piston fixed caliper made of light alloy. Locking bolt for the attachment of the fixed caliper to the steering knuckle changed.
- Rear wheel brake with 2-piston fixed caliper and internally ventilated brake disk.
- Acceleration skid control (ASR III) standard.

courtesy of 500Eboard.com

46 Steering

- Steering gear 765.921 (LSL 068).
- Power steering pump VT 61 or ZL 61.
- Electrically adjustable steering column.

Body, electrical system, air conditioning

The body of model 124.036 is a variant of the sedan of model series 124 matched to the sportive character of engine and chassis with the following vehicle dimensions:

Overall length	4750 mm (+ 10 mm)
Width	1796 mm (+ 56 mm)
Operational height	1408 mm (– 23 mm)

The overall width including the outside mirrors remains unchanged. The interior space dimensions remain the same except for the wider tunnel. The "sportline" or "sports chassis" outfit is no longer included.

60 Body, general

- The installation of the V8 engine and the wider tracks result in changes on:
  Front end, front and rear wheel installation, bulkhead, tunnel, main floor, rear floor, various members, reinforcements and consoles, front and rear wings.
- Straightening angle sets by Celette and Car-Bench for model 124.036 can be used.

72 Doors

- 4 power windows with comfort closure standard.

courtesy of 500Eboard.com

82	**Electrical system body**	• Radio "Becker Mexico 2000" standard. • Headlamp units include high beam headlamps instead of fog lamps. • Ellipsoid fog lamps are integrated in the front bumper cover panel. • Stroke of single-arm wiper increased by 4 mm.
83	**Air conditioning**	• Air conditioning standard, automatic climate control as special equipment.
88	**Attachments**	• Steeper angle of front bumper cover panel reduces the front axle lift. • Fog lamps integrated in the front bumper cover panel. • Bumper and side cover panels front and rear laterally adapted to the wings.
91	**Seats**	• Sports seats in fabric design front and rear as standard, electrically adjustable at the front.
98	**Paintwork**	• Metallic paint finish standard.

courtesy of 500Eboard.com

Crankcase, cylinder head, crankcase ventilation

Apart from the major changes and innovations described in the following the engine 119.974 corresponds to the engine 119.960 in model 129.066.

Crankcase

Dimension "A" cylinder head mating surface to crankshaft center reduced. Standardized crankcase for engines 119.97 (4.2 and 5.0 liters). Two dowel sleeves left and one right rear, one dowel sleeve right front, to locate the cylinder head gasket and the cylinder heads on the crankcase.

Heating water return connection on crankcase designed as flange.

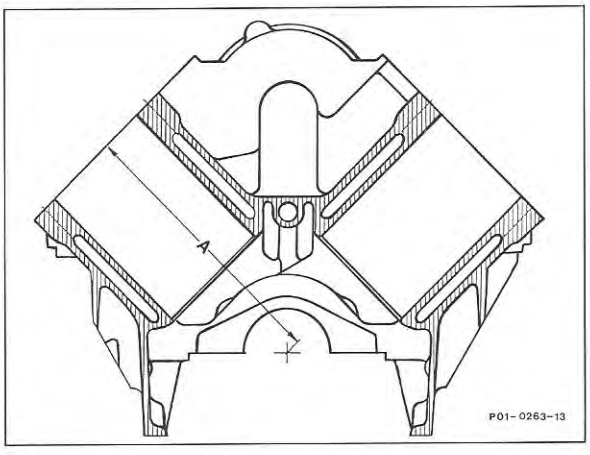

Engine	Dimension A
119.960	245.4 mm
119.974	229.0 mm

Engine number

The engine number is stamped in the area of cylinder 5 in the center of the crankcase for improved legibility (phased-in production breakpoint).

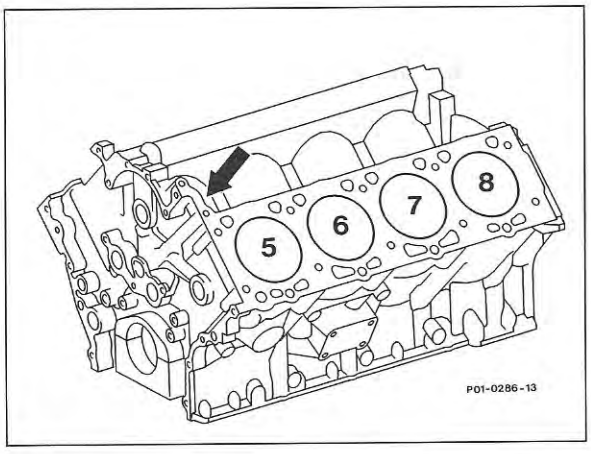

courtesy of 500Eboard.com

Cylinder heads

Adaptation to standardized crankcase and gasoline injection system LH. Breather passages for crankcase ventilation. Wider intake manifold flange.

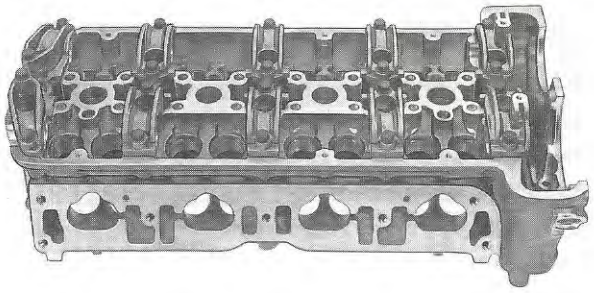

P01-0287-13

Timing case cover

Adaptation to standardized crankcase with integrated air injection ports.

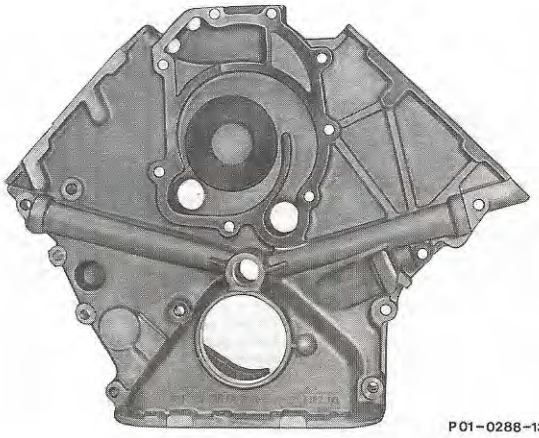

P01-0288-13

Oil pan

Oil pan upper and lower parts adapted to front axle support. Upper part aluminum die cast, lower part steel plate.
The shape of the oil baffles in the oil pan left and right was changed.

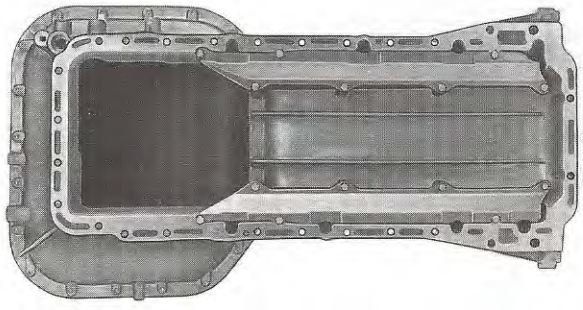

P01-0289-13

courtesy of 500Eboard.com

Crank assembly

Connecting rods

Connecting rod length changed.
The forged connecting rods with upper (1) and lower (3) weight compensation are installed with the narrow side facing and axially guided by the crankshaft. Connecting rod and connecting rod cap are fitted together by means of two dowel sleeves (5). The connecting rod bolt (4) is screwed into the thread M9 x 1 of the connecting rod.

L	Connecting rod left side
R	Connecting rod right side
1	Weight compensation
2	Identification
3	Weight compensation
4	Connecting rod bolt M9 x 1
5	Dowel sleeve
6	Connecting rod bearing shell top
7	Connecting rod bearing shell bottom
8	Locating lug bearing shell

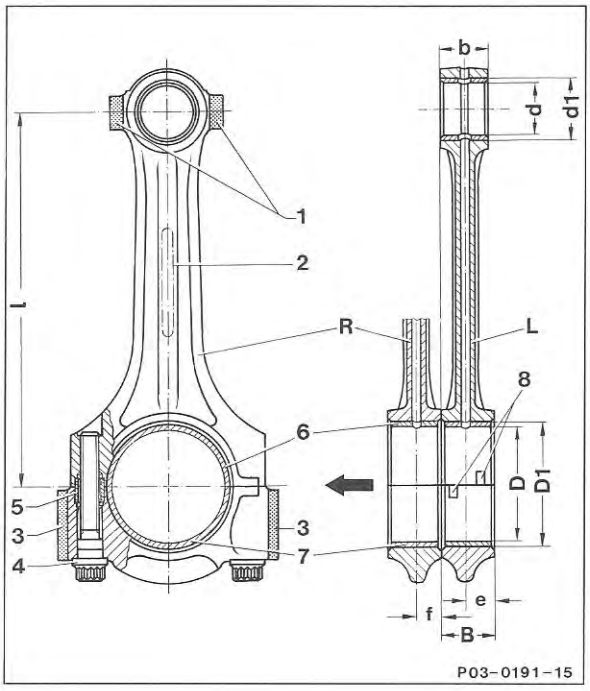

b	21.9–22.10
d	24.007–24.013
d1	27.000–27.021
l	148.95–149.05
Arrow	Direction of driving

Crankshaft

Counterweights with reduced radii. Crankshaft pulley with 8 grooves.

courtesy of 500Eboard.com

Pistons

Cast aluminum piston with iron-coated and tin-coated running surface. Piston crown with central hump and 4 valve recesses. The piston code figure, the group number and the direction of driving arrow are now **stamped into** the piston crown.
The piston code figure and the group number are additionally stamped laterally next to the piston pin.
Piston pin axis offset 1.2 mm.

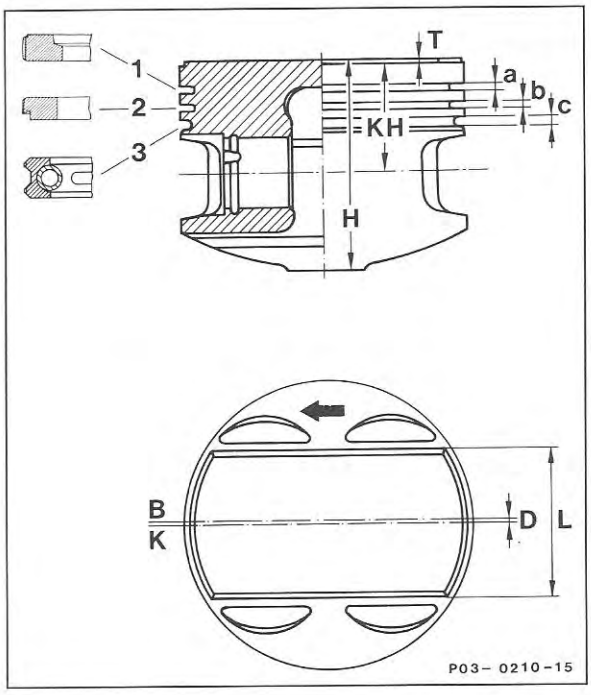

1 Taper face ring
2 Rectangular ring
3 Oil scraper ring
H 75.70

Piston pins

Outside diameter 24 mm, was 26 mm. Length 62 mm, was 60 mm.

courtesy of 500Eboard.com

Valve train, valves

Valves

Valve shaft diameter of intake and exhaust valves reduced to 7 mm, likewise valve shaft stem seals and valve spring retainers at the top. Three retaining grooves for valve collets (arrows).

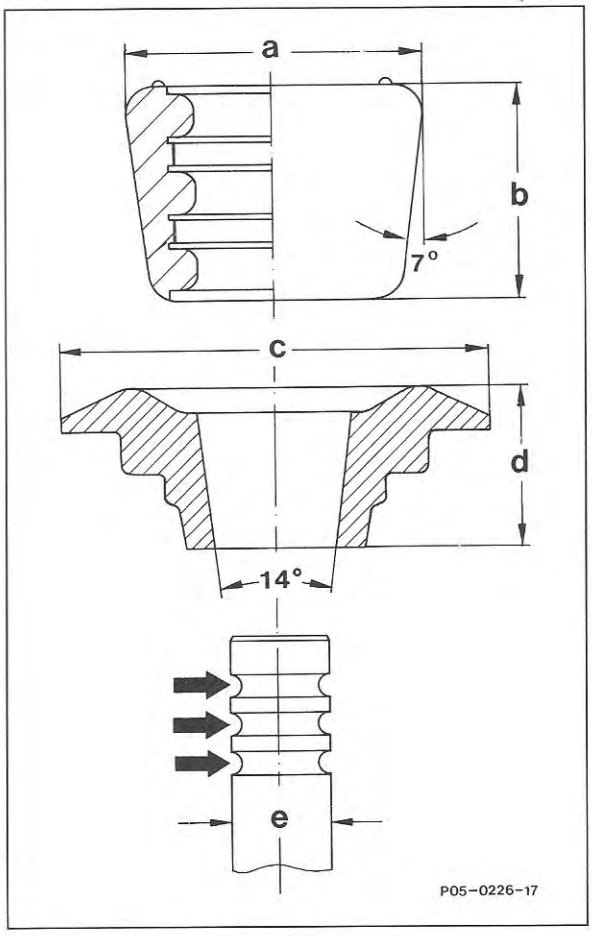

a	10.25	mm
b	7.5	mm
c	30.0	mm
d	21.7	mm

Valve collet

New shape, 3 retaining beads.

Valve guides

Inside diameter adapted to reduced valve stem diameter.

courtesy of 500Eboard.com

Camshafts

Changed timing and camshaft code figures.

Timing in ° crank angle (KW) with 2 mm valve lift and new timing chain [1])

Camshaft adjuster in position:	retarded	advanced	retarded	advanced	–	–
Camshaft code figure [2])	Intake opens ATDC	Intake opens ATDC	Intake closes ABDC	Intake closes ABDC	Exhaust opens BBDC	Exhaust closes BTDC
Intake left 72 73 [3])	29°	4°	39°	14°	–	–
Intake right 74 75 [3])	28°	3°	38°	13°	–	–
Exhaust left 76 77 [3])	–	–	–	–	14°	14°
Exhaust right 78 79 [3])	–	–	–	–	15°	15°

1) Test only in engine turning direction without slack. Permissible deviation: ± 2° crank angle.
2) Camshaft code figure on 3rd camshaft bearing pin front.
3) Repair camshaft with 0.5 mm greater bearing diameter.

Camshaft adjuster

Changed toothing, consequently adjusting angle 25°, previously 20° (adaptation to gasoline injection system LH). Tapered spring in camshaft adjuster reinforced, consequently improved noise behaviour during idle speed operation. Camshaft sprocket with two position sensors for ignition control unit.

Chain drive

Timing chain length, tension and sliding rails adapted to lower crankcase.

courtesy of 500Eboard.com

Gasoline injection system LH

General

In order to be able to regulate even more accurately and more economically in all engine operating conditions, the engines are equipped with an electronic gasoline injection system with hot wire air flow sensor (LH).

The abbreviation LH means
L = Air flow measurement
H = Hot wire

The basic system of the electronic gasoline injection system LH is a driveless, electronically controlled gasoline injection system. This is a direct measurement of the inducted air mass by means of a hot wire air flow sensor.

courtesy of 500Eboard.com

Influence factors on control unit LH (N3/1)

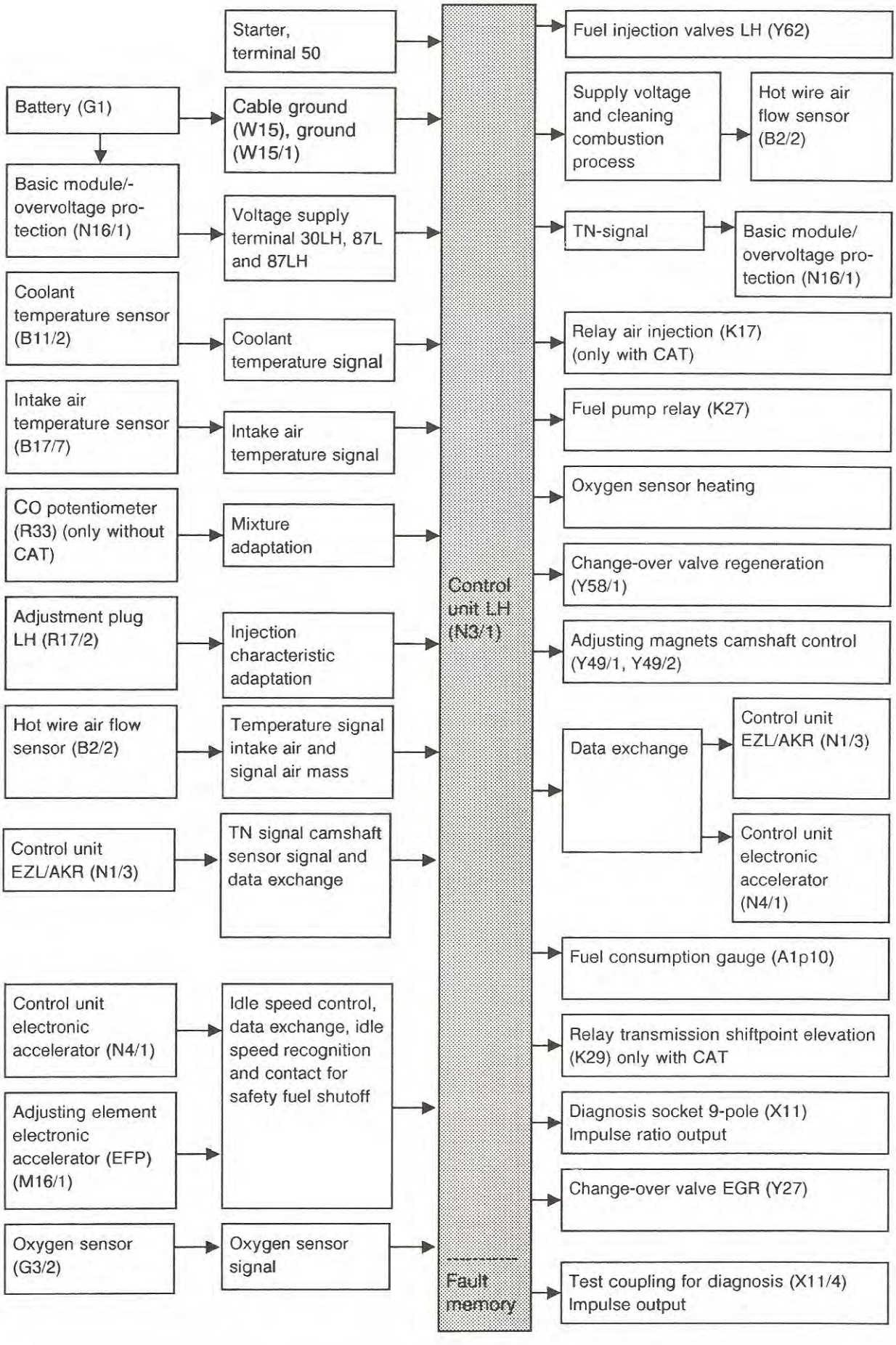

courtesy of 500Eboard.com

Function diagram gasoline injection system LH

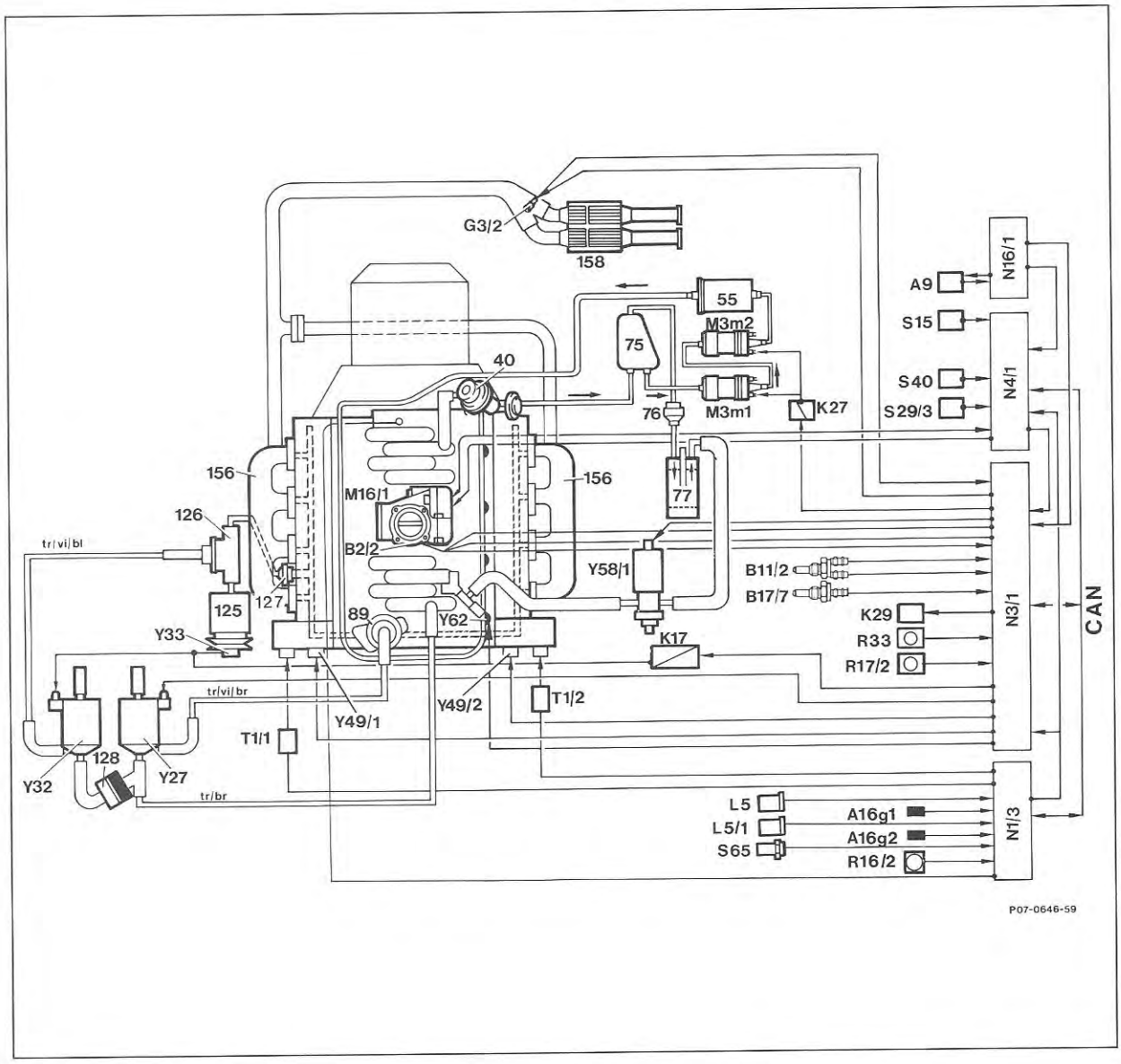

40	Diaphragm pressure regulator
55	Fuel filter
75	Fuel tank
76	Ventilation valve
77	Charcoal canister
89	Exhaust gas recirculation valve
125	Air pump [1]
126	Air shutoff valve [1]
127	Check valve (injection air) [1]
128	Check valve (vacuum)
156	Exhaust manifold
158	Catalytic converter

A9	Refrigerant compressor
A16g1	Knock sensor 1
A16g2	Knock sensor 2
B2/2	Hot wire air flow sensor
B11/2	Temperature sensor coolant (EZL/CIS-E/LH) 4-pole
B17/7	Temperature sensor intake air
G3/2	Oxygen sensor heated
K17	Relay air injection [1]
K27	Relay fuel pump
K29	Relay transmission shiftpoint elevation [1]
L5	Position sensor crankshaft
L5/1	Position sensor camshaft

Continued next page

courtesy of 500Eboard.com

M3m1	Fuel pump 1
M3m2	Fuel pump 2
N1/3	Control unit EZL/AKR
N3/1	Control unit air hot wire (LH)
N4/1	Control unit electronic accelerator
N16/1	Basic module overvoltage protection
R16/2	Trimming plug connector EZL/AKR
R17/2	Resistance trimming plug LH
R33	CO potentiometer additive characteristic adjustment (only without CAT)
S15	Switch 2nd driving program
S29/3	Idle speed contact switch
S40	Cruise control touch button switch
T1/1	Ignition coil 1
T1/2	Ignition coil 2
Y27	Change-over valve EGR
Y32	Change-over valve air pump [1]
Y33	Electromagnetic clutch air pump [1]
Y49/1	Adjusting magnet camshaft control right
Y49/2	Adjusting magnet camshaft control left
Y58/1	Change-over valve regeneration
Y62	Fuel injection valves LH
[1]	not included in vehicles without CAT

Arrangement of components

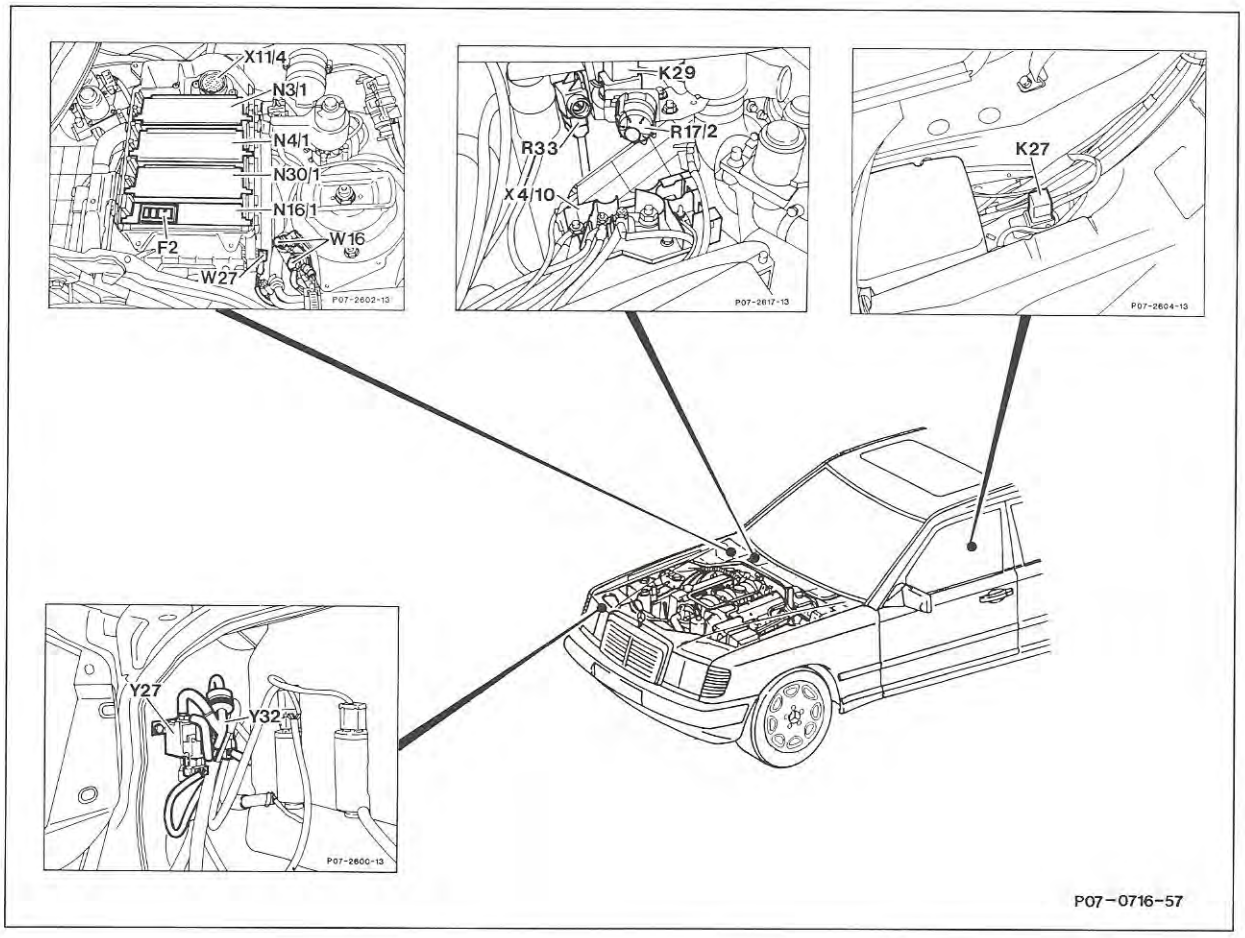

Components in engine compartment

K27	Relay fuel pump
K29	Relay transmission shiftpoint elevation [1]
N3/1	Control unit air hot wire
N4/1	Control unit electronic accelerator
N16/1	Basic module overvoltage protection
R17/2	Resistance trimming plug LH
R33	CO potentiometer additive characteristic adjustment (only without CAT)
Y27	Change-over valve EGR
Y32	Change-over valve air pump [1]
[1]	not included in vehicles without CAT

courtesy of 500Eboard.com

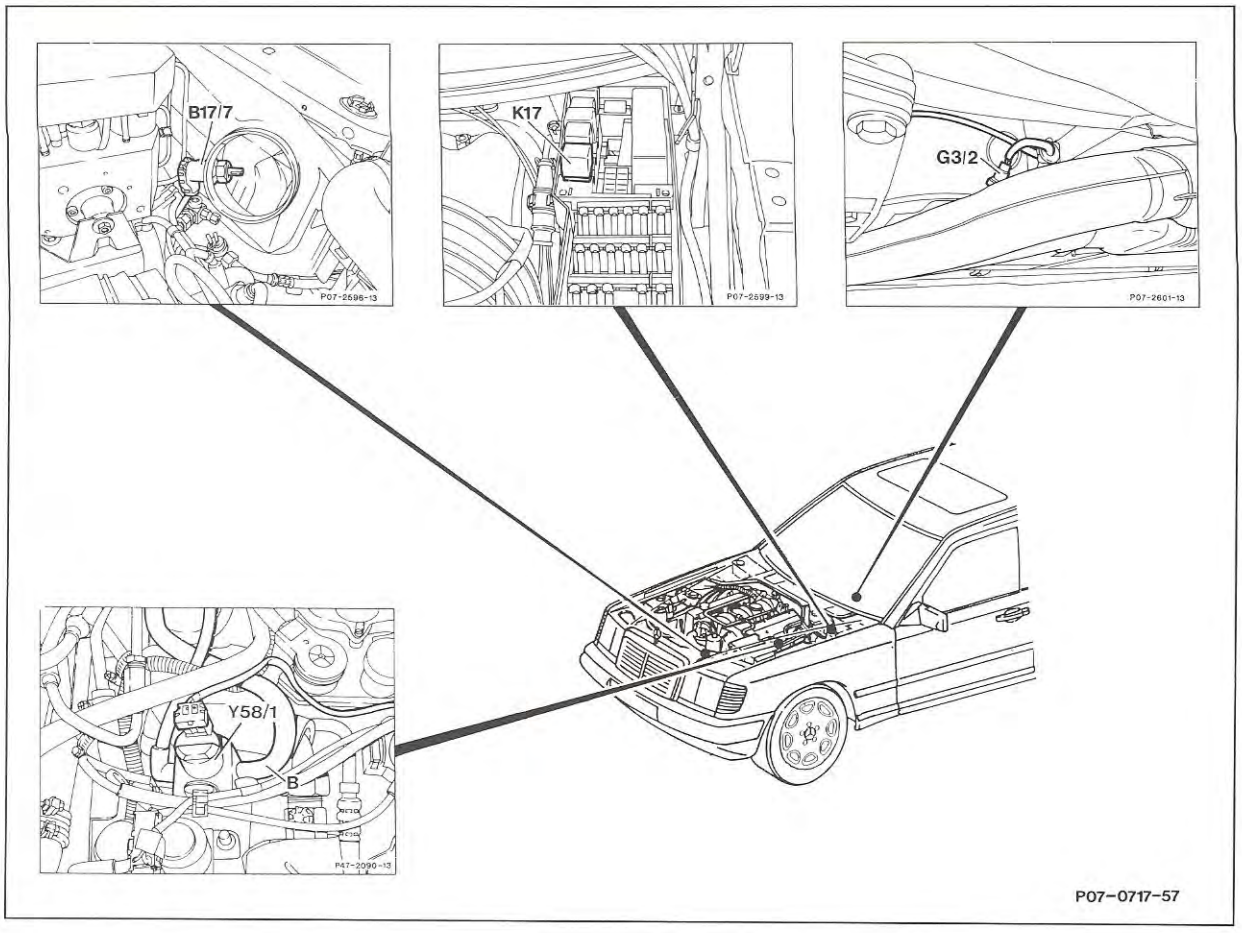

Components in engine compartment

B17/7	Intake air temperature sensor	Y58/1	Change-over valve regeneration
G3/2	Oxygen sensors heated		
K17	Relay air injection [1])	[1])	not included in vehicles without CAT

courtesy of 500Eboard.com

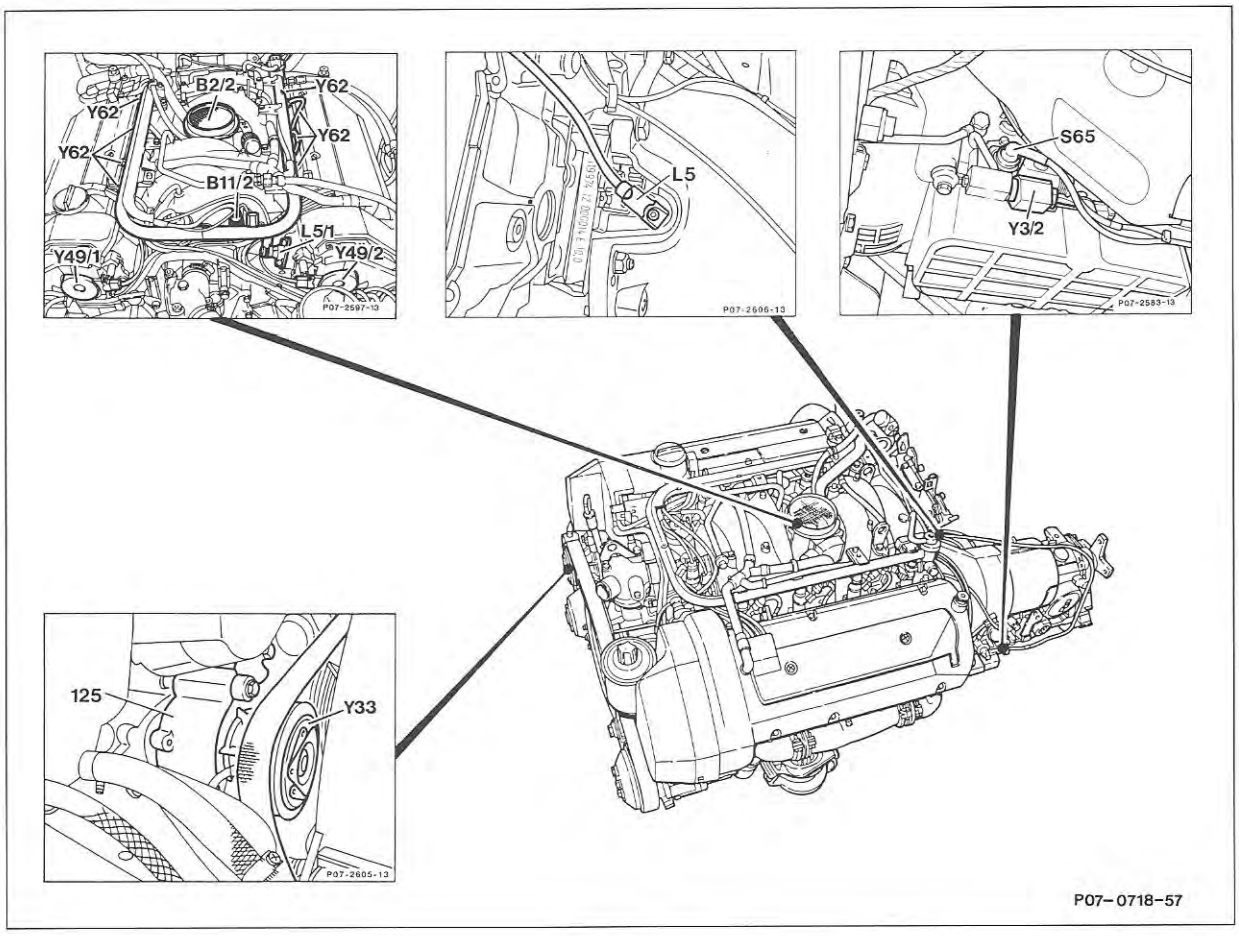

Components on engine

B2/2	Hot wire air flow sensor	Y49/1	Adjusting magnet camshaft timing right
B11/2	Coolant temperature sensor (EZL/CIS-E/LH) 4-pole	Y49/2	Adjusting magnet camshaft timing left
		Y62	Fuel injection valves LH
L5	Crankshaft position sensor		
L5/1	Camshaft position sensor		
Y3/2	Solenoid valve shiftpoint elevation	[1])	not included in vehicles without CAT
Y33	Electromagnetic clutch air pump [1])		

courtesy of 500Eboard.com

Construction and function

1. Fuel supply
2. Construction and function of hot wire air flow sensor
3. Activation of injection valves and fuel metering under various operating conditions
4. Influence factors controlling the gasoline injection system LH
5. Functions in the LH control unit

1. Fuel supply

Fuel pump pack

Two fuel pumps (M3m1/M3m2) arranged in series on the fuel side, deliver the fuel from the fuel tank to a distribution pipe via a fuel filter. They are activated during the starting process and while the engine is running. For safety reasons they are activated for only approx. 1 second (flooding protection) with ignition "ON".

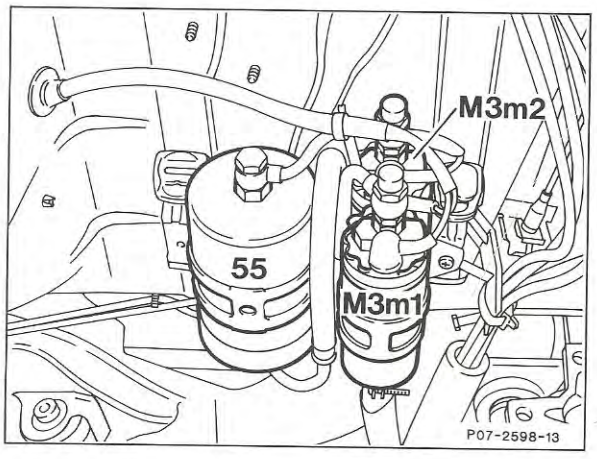

Activation of fuel pumps

These are activated by the control unit LH via the fuel pump relay (K27). The speed recognition for the control unit LH is by means of the TN signal or, if the TN signal has not been recognized, by the signal from the camshaft position sensor.

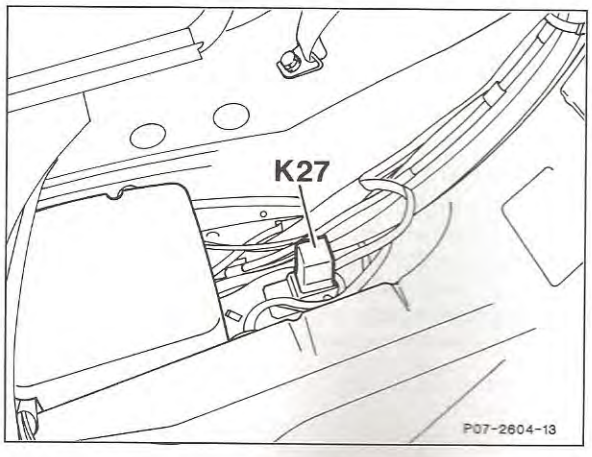

courtesy of 500Eboard.com

Distribution pipe (17)

The distribution pipe ensures identical fuel pressure at all injection valves. It has a storage function. Its volume, compared with the fuel quantity injected for each power stroke, is large enough in order to prevent pressure fluctuations. A connection with valve (arrow) to check the fuel pressure is situated on the distribution pipe.

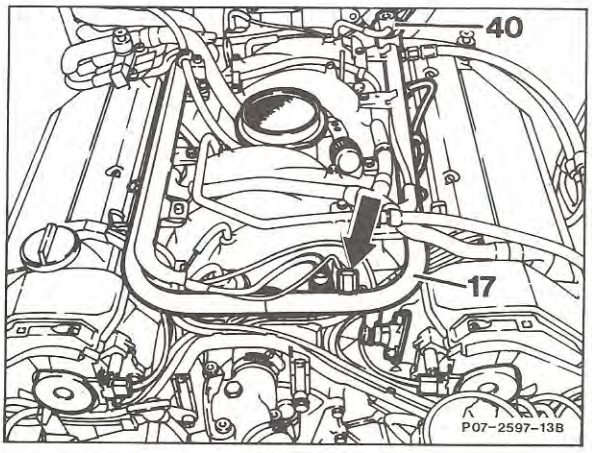

Diaphragm pressure regulator (40)

The pressure regulator is mounted to the end of the distribution pipe. This is a diaphragm-controlled overflow pressure regulator, regulating the fuel pressure to between approx. 3.1 to 3.8 bar depending on the absolute pressure in the intake manifold. This control pressure cannot be changed.

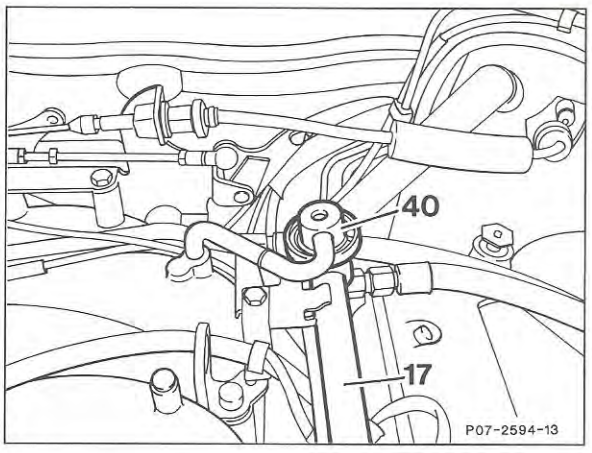

Function of diaphragm pressure regulator (40)

This consists of a metal housing divided into two chambers by a diaphragm (42). Spring chamber (43), fuel chamber (41). If the adjusted pressure is exceeded, the diaphragm (42) is forced against the spring (47). A valve (44) attached to the diaphragm exposes the opening for the return (b), the excess unpressurized fuel can return to the fuel tank.

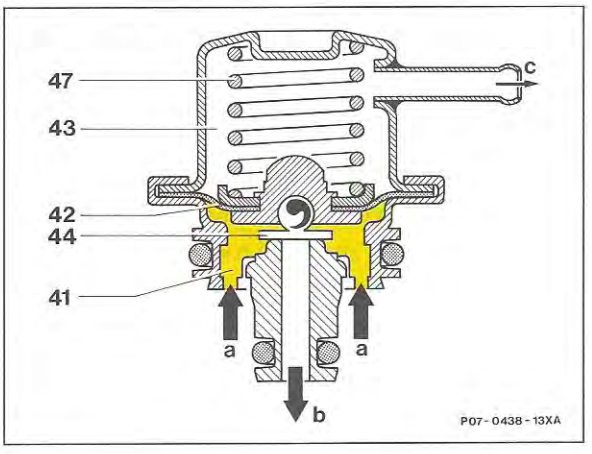

courtesy of 500Eboard.com

The spring chamber is connected with the intake manifold by a vacuum connection (c). The vacuum acts against the spring (47), reducing the fuel pressure by the current intake manifold vacuum (see fuel pressure diagram). As a consequence, the fuel pressure in the distribution pipe depends on the absolute pressure in the intake manifold and the pressure drop via the injection valves is identical in any throttle valve position. This means that the injected fuel quantity is exclusively determined by way of the opening time of the injection valves.

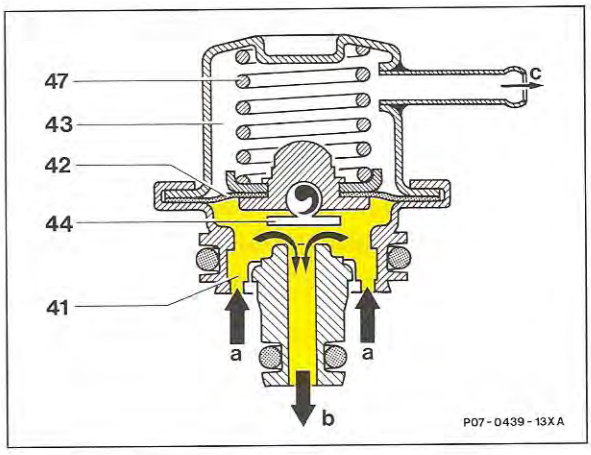

Fuel pressure diagram

Fuel pressure in bar.
Intake manifold vacuum in mbar.

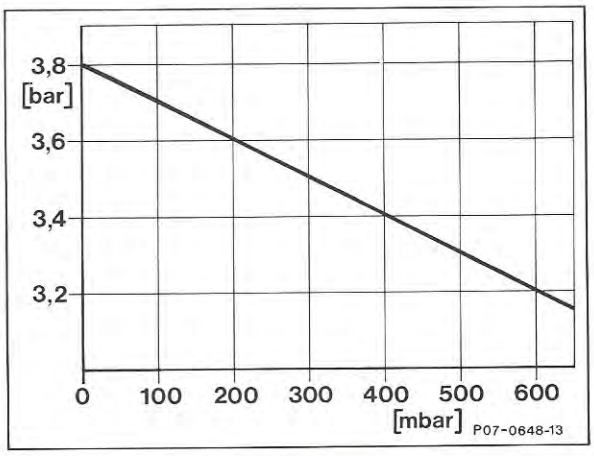

Fuel injection valve LH (Y62)

Injection is by means of electromagnetic injection valves. Each cylinder has its own injection valve, injecting accurately metered fuel into the intake manifold in front of the intake valve.
The injection valve consists of a valve body, the injector needle (56) with fitted magnetic armature (55). The valve body contains the magnetic winding (53) and the guide for the injector needle.
The fuel reaches the calibrated outlet orifice (a) through a prefilter (51) and a bore in the magnetic armature (55).
When the magnetic winding is without current, the injector needle is pressed on its sealing seat by a coil spring (54).

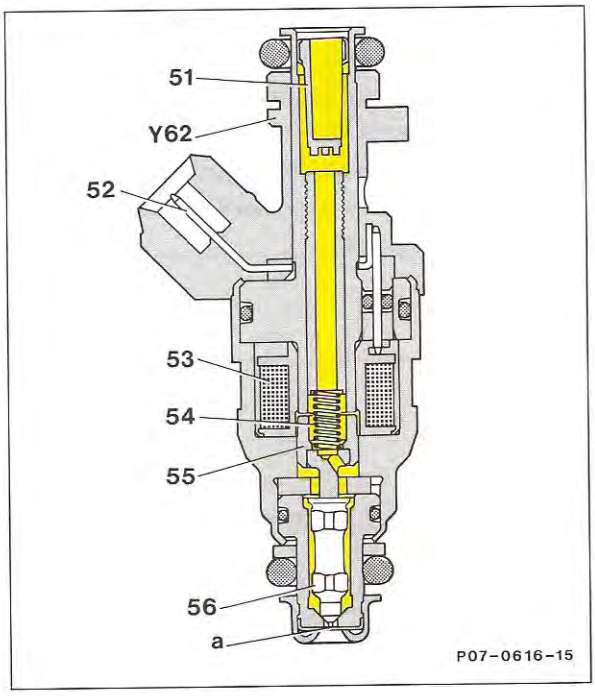

courtesy of 500Eboard.com

When the magnetic winding is excited, the injector needle is lifted approx. 0.1 mm off its seat and the fuel can exit through the 4 orifices with 0.2 mm diameter (a).
The opening and closing time of the valve is less than 1 ms.

Note
The polarity plus and minus must not be changed on the fuel injection valves.

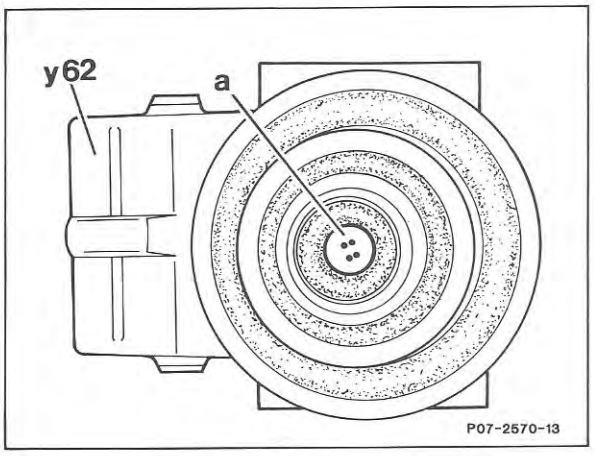

Owing to the arrangement of the orifices, two jets are formed when the fuel exits, which directly spray onto the two intake valves.

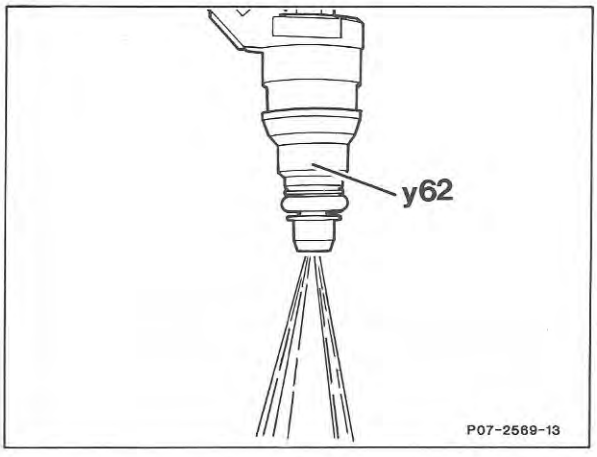

2. Construction and function of hot wire air flow sensor

Construction
A thin platinum wire (R_H) is stretched out in the interior of a measuring pipe. The inner measuring pipe consists of two plastic halves housing the hot wire retaining ring (62), the measuring resistor (R3) and compensation resistor (R_K).

The electronic part with hybrid circuit (66) directly connected to the LH control unit is located on the housing.

One protective grille each (67) protects the measuring device from damage. Turbulences are also equalized so that the hot wire is subjected to a uniform air flow.

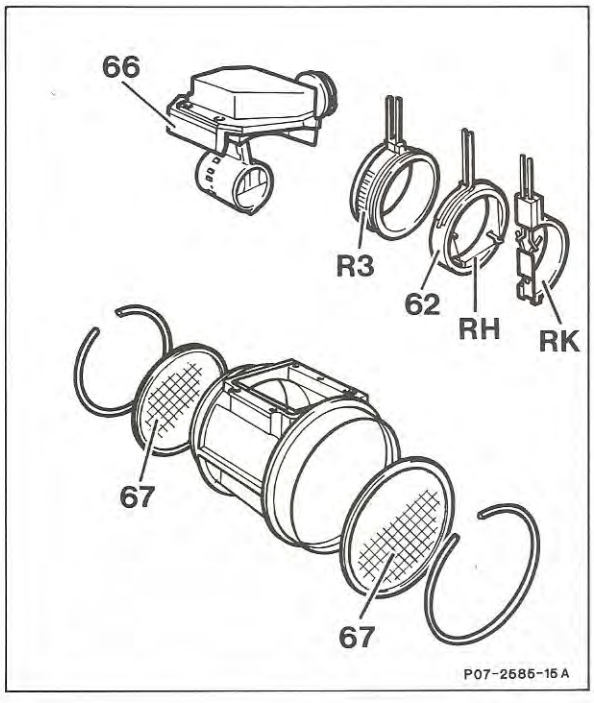

courtesy of 500Eboard.com

Function

The air flow sensor operates with a thin heated hot wire made of platinum (R_H) in the intake air flow. The components hot wire (R_H), compensation resistor (R_K) and measuring resistor (R3) are incorporated in a bridge circuit.

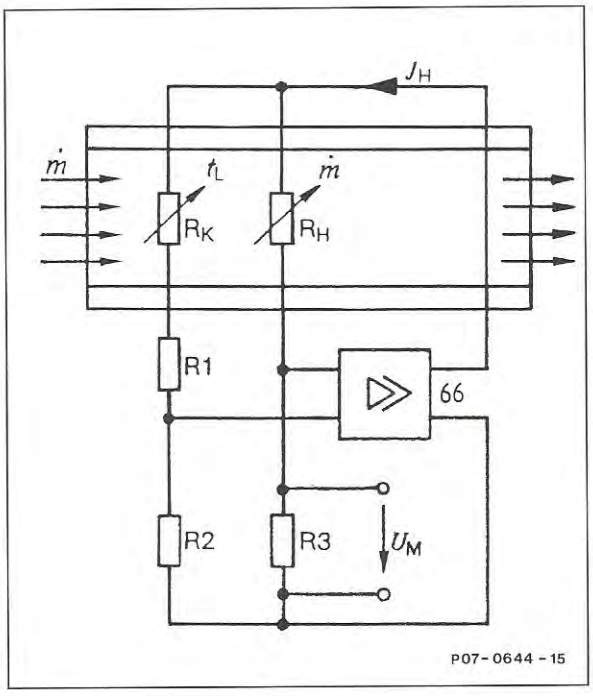

The hot wire is a temperature-dependent resistor increasing its resistance with rising temperature. In operation the hot wire is subjected to a high current (J_H) so that it is heated to approx. 180 °C above the current air temperature. This temperature differential is always kept constant. The current air temperature is registered by the compensation resistor (R_K) located in front of the hot wire and signalled to the regulating amplifier (66). The hot wire is cooled down with increasing air throughput, reducing its electrical resistance. In order to maintain the temperature on the hot wire constant, the heating current (J_H) is immediately regulated.

The regulation to constant temperature takes place in a matter of a few milliseconds because of the low mass of the hot wire. Since the heating current flows via the measuring resistor (R3), a current change due to air flow change can be taken off the measuring resistor in form of a voltage drop. The heating current is between 500 to 1200 mA depending on the air flow. This voltage drop constitutes the measuring quantity for the inducted air flow for the LH control unit.

courtesy of 500Eboard.com

Temperature fluctuations of the intake air are compensated by the compensation resistor (R_K) so that the air flow signal is not influenced. The hot wire air flow sensor has no moving parts and causes only minor flow resistance in the air intake passage.

Demand-controlled cleaning combustion process

Dirt settling on the hot wire can influence its resistance and consequently influence the measuring result.

For this reason the hot wire is heated to approx. 1000 °C for approx. 1 second 4 seconds after shutting down the engine, if the following conditions prevail:

1. Coolant temperature above 60 °C
2. Engine speed 1650 rpm exceeded once
3. Air flow of more than approx. 300 kg has been inducted
   or
4. at least 10 starting operations have been carried out

Emergency operating characteristics

The gasoline injection system LH provides very good emergency operation characteristics. Should the hot wire of the air flow sensor fail due to short circuit or interruption, the injection time is calculated from the absolute intake manifold pressure. In this case the pressure conditions in the intake manifold are registered by a pressure sensor in the control unit EZL/AKR and passed on to the LH control unit via the serial data bus (CAN).

courtesy of 500Eboard.com

3. Activation of injection valves and fuel metering under various operating conditions

General

Injection is by means of electromagnetic injection valves. Each cylinder has its own injection valve, injecting the accurately metered fuel into the intake manifold in front of the intake valves. The injection valves are directly connected to plus and are opened by the LH control unit by means of ground impulses. The injection valves are activated according to the firing order.
Depending on engine load and speed the fuel is injected earlier or later, and drawn into the combustion chamber together with the air after the intake valves have opened. The control unit LH calculates the injection time according to the engine operating condition. The injected fuel quantity is determined by the opening time of the injection valves.

Basic injection quantity

The basic injection quantity is influenced by the control unit LH depending on the operating condition of the following components:

- Hot wire air flow sensor
- Speed signal (TN)
- Position of resistance trimming plug

Starting control

In order to facilitate cold starting of the engine, additional fuel must be injected during the starting process as a function of coolant temperature. The increased injected quantity is reached by extending the injection time.

courtesy of 500Eboard.com

Starting control commences with the starting process via terminal 50 and remains activated until a temperature-dependent engine speed is exceeded.

The injection quantity required for starting is calculated from the following factors independent of hot wire air flow sensor:

- Coolant temperature
- Camshaft speed (camshaft position sensor)
- Intake manifold pressure (control unit EZL/AKR)
- Non-operating time of engine

Post-starting enrichment

After starting a cold engine, enrichment with additional fuel is required for a short period. This compensates the increased fuel precipitation and the engine runs perfectly smooth. Post-starting enrichment is dependent on:

- Coolant temperature during starting process
- Period of time after starting
- Selector lever position
- Position of resistance trimming plug

Warming-up enrichment

The engine is supplied with the accurately metered fuel quantity dependent on the coolant tem-perature, while the injection time is suitably extended. Warming-up enrichment is dependent on:

- Coolant temperature when starting
- Intake air temperature
- Engine speed/load
- Idle speed/part load operation
- Position of resistance trimming plug

courtesy of 500Eboard.com

Acceleration enrichment

In order to achieve a sound transition behaviour during acceleration, the fuel injection valves are activated with additional impulses. The enrichment is dependent on:

- Coolant temperature
- Engine speed/load
- Load change speed
- Position of resistance trimming plug

Deceleration shutoff

When the vehicle is coasting (accelerator in idle speed position) the fuel injection is switched off in two stages at coolant temperatures > 0 °C.

In the 1st stage 4 injection valves are switched off while all 8 injection valves are switched off in the 2nd stage. The switching-off and switching-on speeds are shown for an engine at operating temperature as follows.

Engine speed	Engine speed drops (while coasting) ↓	Valves switched off
1400/min	8	8
1240/min	8	4
1150/min	4	0
950/min	0	0
600/min	0	0
	Valves switched off	↑ Engine speed rises (downhill)

Note

At coolant temperatures below 70 °C the engine speeds are relatively higher.

courtesy of 500Eboard.com

Maximum speed control
The maximum speed is limited to approx. 250 km/h. After this speed is exceeded, the mixture is leaned out and the camshafts advanced.

Speed limitation
In order to protect the engine the fuel injection is discontinued if the following engine speeds are exceeded:

Brief maximum governed speed
for 10 s 6300 + 50 rpm,
then permanent maximum governed speed
6000 + 50 rpm

The brief maximum governed speed of 6300 rpm becomes active again only after the speed has dropped below 5500 rpm.
In selector lever positions P, N or R the permanent maximum governed speed is 5600 rpm.

If the speed signal is interrupted, the speed is limited to approx. 5600 rpm in driving positions B, 2, 3 or D. This will prevent exceeding of the maximum speed of 250 km/h even in this case.

Safety fuel shutoff
For the safety function, the LH control unit is connected with the switch contacts in the adjusting element for the electronic accelerator by a separate wire. At idle speed and while driving the switch contacts send a plus signal to the LH control unit.

courtesy of 500Eboard.com

If the throttle valve is further opened than stipulated by the accelerator pedal due to a faulty function while the vehicle is not in cruise control operation, a safety contact in the adjusting element (M16/1) switches a ground signal via the control unit electronic accelerator to the LH control unit. This causes the fuel injection to be interrupted and recommenced only at approx. 1100 rpm. As a result, driving is only possible up to an engine speed of approx. 1100 rpm.

4. Influence factors controlling the LH injection system

Engine speed

The engine speed information is supplied by the crankshaft position sensor (L5) in form of an alternating voltage to the control unit EZL/AKR. This alternating voltage is processed in the control unit and passed on to the LH control unit via the serial data bus (CAN) in form of a rectangular signal (TN signal).

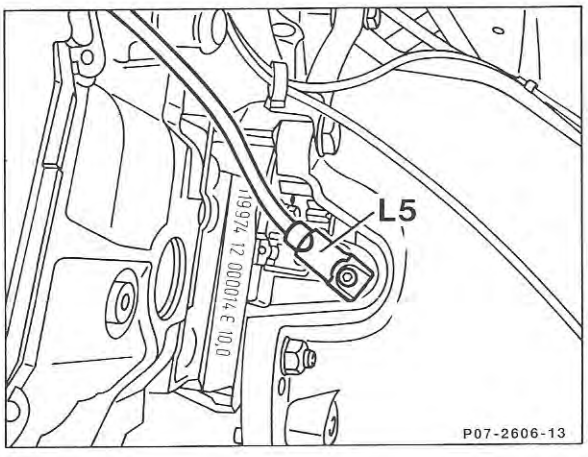

Camshaft speed

In order to achieve the correct allocation of the ignition timing to the respective cylinder, the injection order must be synchronised. The signal of the camshaft position sensor (L5/1) is required for this purpose. The camshaft position sensor generates two alternating voltage signals per camshaft revolution. These signals are processed in the control unit EZL/AKR into rectangular signals and passed on to the LH control unit. Synchronisation takes place during the starting process up to an engine speed of 600 rpm.

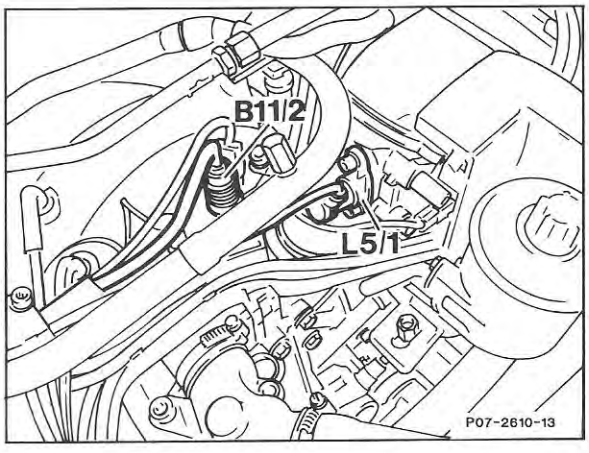

courtesy of 500Eboard.com

Coolant temperature

Two NTC coolant temperature sensors (B11/2) in the coolant circuit register the coolant temperature and convert it into electrical signals. These signals are processed in the LH control unit and effect a correction of the injection time with cold engine. The result is an enriched air/-fuel mixture.

NTC = resistor with negative temperature coefficient. The resistor made of a semi-conductor reduces its electrical resistance with rising temperature.

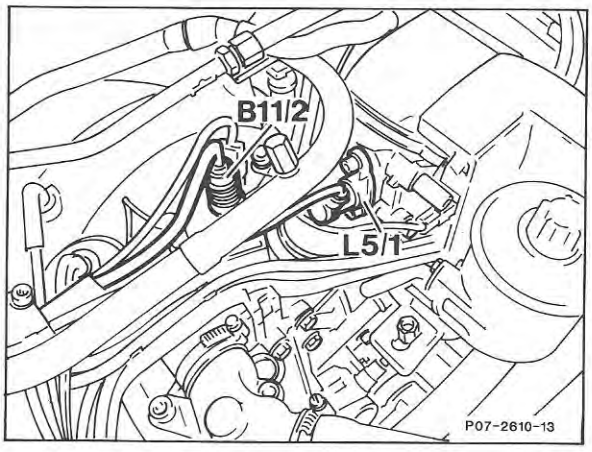

Intake air temperature

In order to ensure perfectly smooth engine operation in cold condition, an intake air temperature sensor (B17/7) influences the quantity injected. An additional mixture enrichment takes place at low intake air temperature.

Like the coolant temperature sensor, the intake air temperature sensor consists of an NTC resistor.

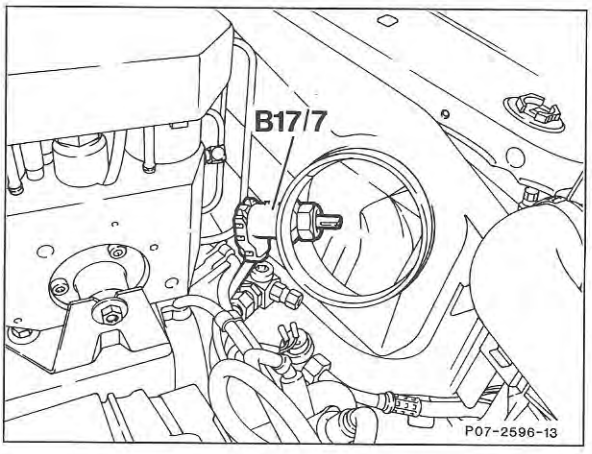

Idle speed and full load recognition

The operating conditions idle speed and full load are registered by potentiometer in the adjusting element for the electronic accelerator (M16/1) and passed on to the LH control unit via the serial data bus (CAN). The idle speed signal is directed to the LH control unit via an additional wire. The idle speed recognition is required for the deceleration shutoff and for the enrichment with cold engine, and the full load recognition is required for the full load enrichment or full load correction.

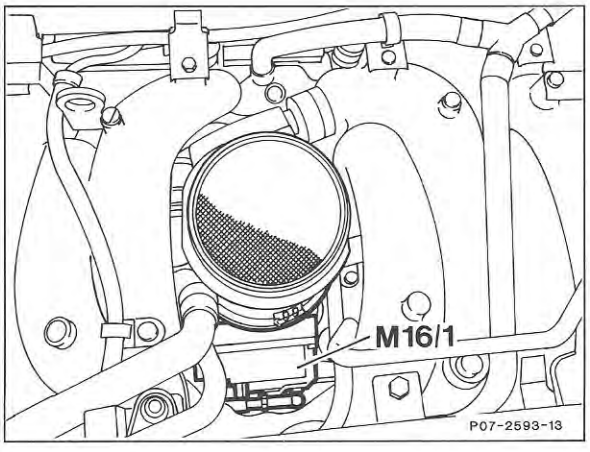

courtesy of 500Eboard.com

Absolute pressure in intake manifold

The pressure conditions in the intake manifold are registered by the pressure sensor in the control unit EZL/AKR (N1/3) and passed on to the LH control unit via the serial data bus (CAN). This information is required for the following operating conditions:

- during the starting process up to an engine speed of approx. 600 rpm.
- after failure of the hot wire air flow sensor in the entire speed range for emergency operation.

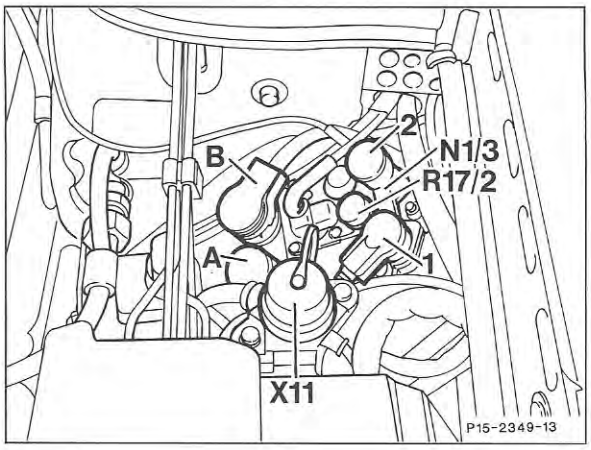

Adaptation of injection characteristics by means of resistance trimming plug LH (R17/2)

All vehicles (except USA/California) are equipped with an resistance trimming plug to adapt various injection characteristics. With this resistance trimming plug it is possible to increase the basic quantity, the warming-up operation, post-starting and acceleration enrichment in defined stages. A total of 7 adjusting stages is possible. Possible corrections by means of resistance trimming plug see Diagnosis Manual Engine Volume 2.

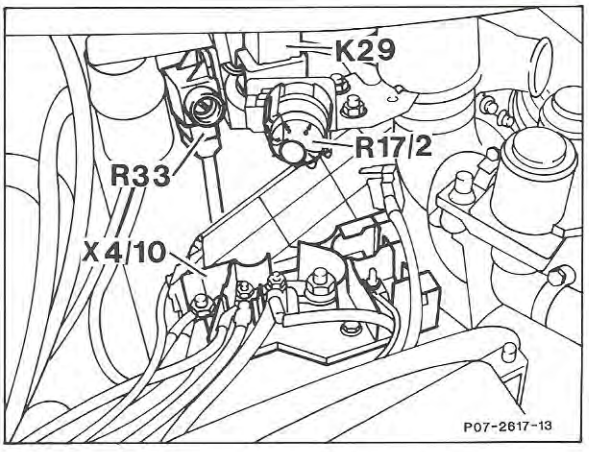

Idle speed CO correction

Vehicles **without CAT** are equipped with a CO potentiometer (R33) in order to adjust the idle speed emission value.

Turning anticlockwise	**leaner**
Turning clockwise	**richer**

Vehicles with CAT have no adjustment capability for the idle speed emission value as the mixture adaptation is carried out by the lambda control.

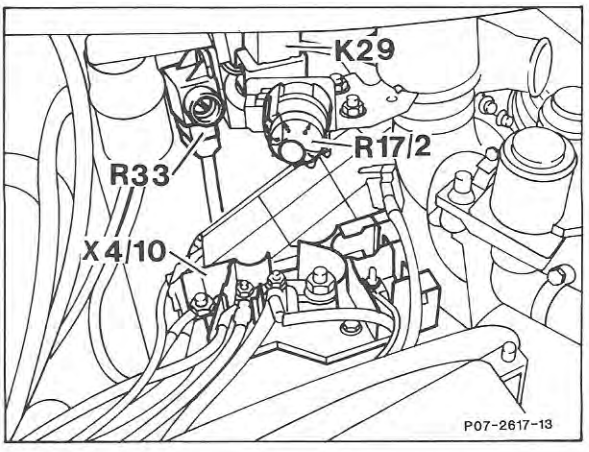

courtesy of 500Eboard.com

Battery voltage and voltage supply

The fuel quantity injected by the electromagnetic injection valve is dependent on the opening times of the injection valves. These opening times are influenced by the battery voltage. In order to compensate the injection quantity with changing battery voltage, the control unit LH corrects the injection time as follows:

lower battery voltage = longer opening time

higher battery voltage = shorter opening time

The voltage supply for the control unit LH and the injection valves is by means of basic module/ overvoltage protection (N16/1). This is located in the module box and has the color coding black. The previously known overvoltage protection is no longer included. The voltage supply terminal 15 is protected by the fuse (F2). The voltage supply terminal 30 is directed without protection to the control unit LH by the basic module/overvoltage protection.

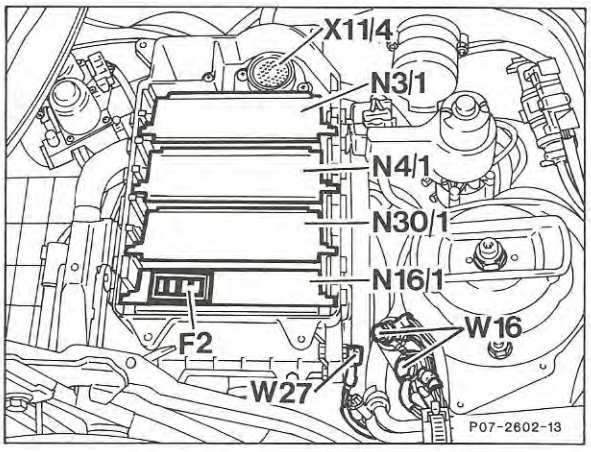

5. Functions in the LH control unit

The LH control unit (N3/1) is structured as a module and located in the module box. Its color coding is dark green/light green. It evaluates the data on the engine operating conditions supplied by the sensors and forms the opening time for the injection valves. The quantity of fuel injected is determined by the opening time of the injection valves.

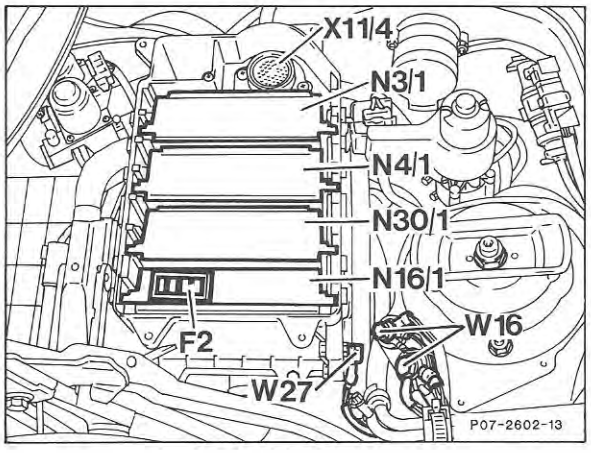

courtesy of 500Eboard.com

An interface to the serial data bus (CAN) is also included, which, due to the serial data transmission, saves a number of otherwise necessary additional inputs and outputs as well as sensors.

Lambda control (as known from CIS-E)
With the regulating circuit formed with the help of the oxygen sensor (G3/2) it is possible to identify and correct deviations from the stoichiometric air/fuel ratio.

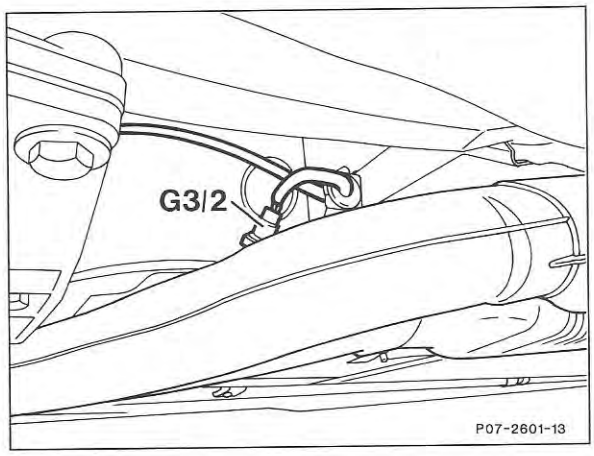

The regulating principle is based on measuring the residual oxygen content (oxygen ions) in the exhaust by means of the oxygen sensor.

The residual oxygen content is a dimension for the composition of the air/fuel mixture directed into the engine.

The oxygen sensor protrudes into the exhaust gas flow and generates a voltage dependent on oxygen content, which is reported to the LH control unit. With rich mixture this value is between 500–1000 mV, between 100–400 mV with lean mixture and around 450 mV with correct mixture. If the voltage emitted by the oxygen sensor is outside 450 mV, the LH control unit corrects the injection quantity. In this way the fuel quantity can be accurately metered so that the air/fuel ratio is at an optimum (around $\lambda = 1.0$, corresponding 14.7 kg air to 1 kg fuel) in all operating conditions. With cold oxygen sensor the control unit LH switches to controlled operation.

courtesy of 500Eboard.com

Oxygen sensor heating (as known from CIS-E)

Beside the oxygen content in the exhaust gas the temperature of the ceramic body (80) of the oxygen sensor plays also an important role, as this influences the conductivity for the oxygen ions. The ceramic material becomes conductive for oxygen ions from approx. 300 °C, the operating temperature is around 600 °C. A heating element (81) is located in the oxygen sensor which is supplied with voltage by the control unit LH at a coolant temperature above 35 °C. In this way it is ensured that the oxygen sensor reaches its operating temperature very rapidly. The capacity of the oxygen sensor heating is 18 watt.

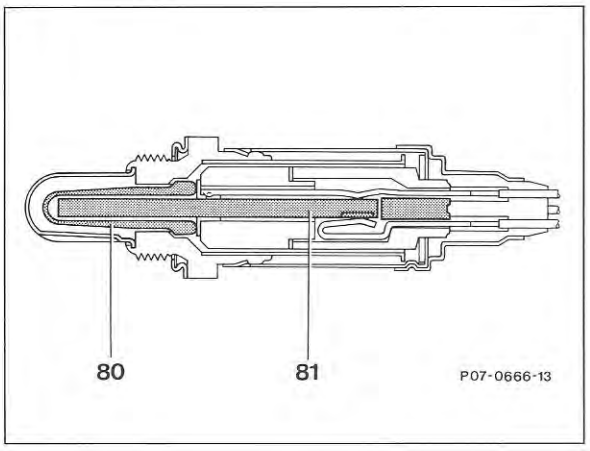

As the sensor heating is no longer required at higher engine speed because of the hot exhaust gasses, it is switched off at an engine speed above 5500 rpm and on again below 5000 rpm.

Regeneration charcoal canister

A fuel evaporation system is installed to allow less fuel vapours to escape into the atmosphere. The fuel vapours stored in the charcoal canister are drawn off via the regeneration change-over valve (Y58/1) at coolant temperatures > 70 °C and combusted in the engine (not in coasting operation).

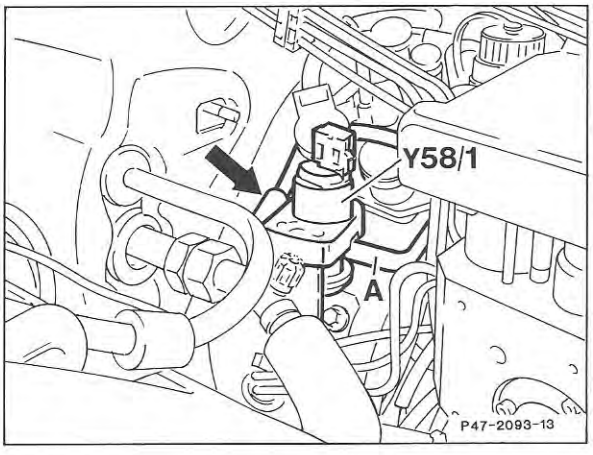

In order to regulate the regeneration quantity, the regeneration change-over valve (Y58/1) is activated (indexed) by the control unit LH with a frequency of 7 1/2 Hz. The constant opening and closing of the change-over valve to produce on and off times of various durations determines the regeneration quantity (see Group 47).

courtesy of 500Eboard.com

Air injection (only CAT version, as known from CIS-E)

The operability of the catalytic converter commences only from a temperature above approx. 300 °C. In order that the catalytic converter reaches its operating temperature faster, air from an air pump (125) is directed into the exhaust gas directly behind the exhaust valve. This air causes a recombustion of the incompletely oxidized exhaust gas constituents CO and HC. The magnetic clutch of the air pump is switched on by the LH control unit via the air injection relay (K17). The air pump change-over valve is activated at the same time, exposing the vacuum to the air shutoff valve.

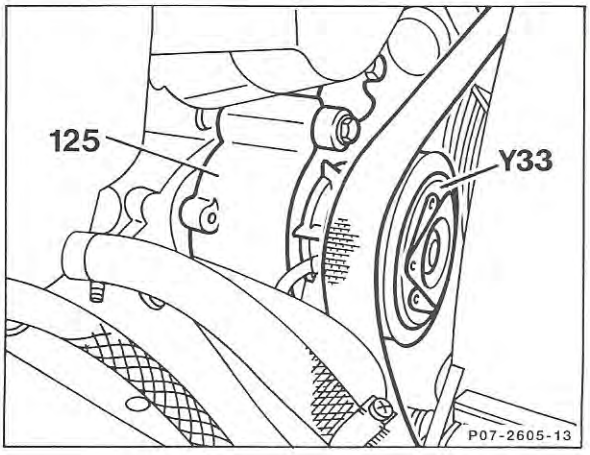

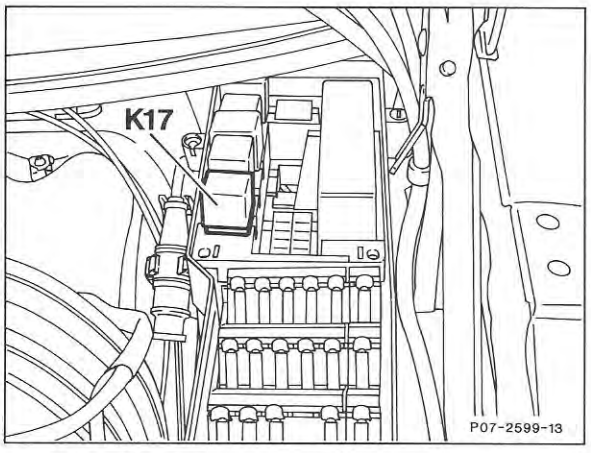

The air injection commences after engine start at a coolant temperature between 10 °C and 40 °C and when the engine speed of 2500 rpm and a certain air flow is not exceeded.

Depending on the coolant temperature, the air is injected for a maximum of 110 seconds. The lambda control is inoperative during this process (see Group 14).

Transmission shiftpoint elevation 2→3 (only CAT version as known from CIS-E)

In order for the catalytic converter to reach its operating temperature faster during the warming-up phase, the 2→3 idle speed and part load shift in the automatic transmission is elevated between a coolant temperature of 0 to 50 °C for max. 15 seconds after starting. Consequently the engine revs slightly higher before shifting. This is controlled by the LH control unit and the transmission shiftpoint elevation relay (K29).

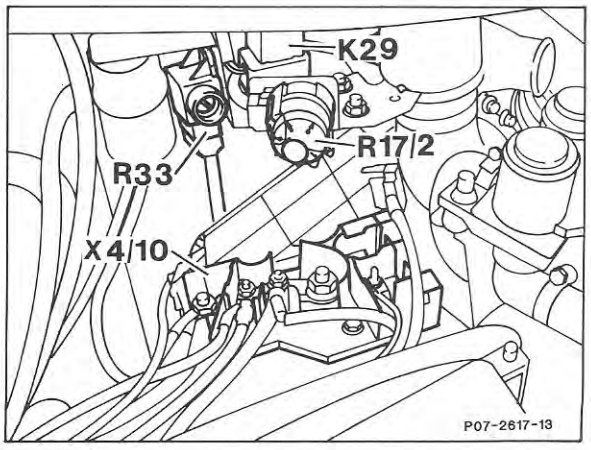

courtesy of 500Eboard.com

Exhaust gas recirculation (as known from CIS-E)

In order to reduce the nitric oxides (NOx) in the exhaust gases, a part of the exhaust gases (approx. 10-15%) is returned from the exhaust manifold into the intake manifold via an exhaust gas recirculation valve. The entering point for the exhaust gas is situated behind the throttle valve so that the air flow sensor is not influenced.

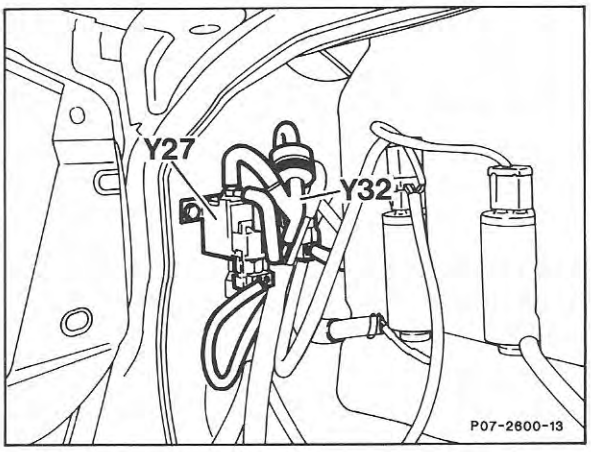

The exhaust gas recirculation valve is controlled by the LH control unit via the EGR change-over valve (Y27). This change-over valve is activated when the coolant has reached 65 °C and the engine is operated neither at idle speed nor at full load. In this way the exhaust gas recirculation is operational (see Group 14).

Camshaft timing (intake camshafts, as known from CIS-E)

In order to achieve a more favourable engine torque, the two intake camshafts are advanced depending on engine speed and load.

One adjusting magnet each is provided on the camshaft timing mechanisms, which actuates the control piston for the hydraulic/mechanical adjustment. The adjusting magnets are activated by the LH control unit.

If both adjusting magnets are activated, the intake camshafts are advanced. The adjustment is dependent on the load and the engine speed. In selector lever positions P/N, it is influenced only by the engine speed.

courtesy of 500Eboard.com

Camshaft timing (selector lever in driving position and medium load)

Engine speed	Position
up to approx. 2000 rpm	retard
from 2000 to 4200 rpm	advance
from 4200 rpm	retard
above 250 km/h	advance

In selector lever position P/N the shiftpoint at 3000 rpm is advanced.

Fuel shutoff in the case of ignition faults

In order to protect the catalytic converter from overheating, the injection valves of the ignition circuit concerned are switched off if ignition faults occur in a primary power circuit.

The following faults are recognized by the primary current monitoring in the control unit EZL/AKR and transferred to the LH control unit via the serial data bus (CAN):

- Ignition final stage in ignition control unit defective.
- Ignition coil defective or line interruption.

Faults occurring behind the ignition coil are not registered.

Idle speed control

The function of idle speed control is assumed by the electronic accelerator control unit (N4/1). The data required for engine speed control are sent to the electronic accelerator control unit by the LH control unit via serial data bus (CAN) (function see Group 30).

courtesy of 500Eboard.com

Electronic accelerator

If engine speed increase is required during testing, the speed increase must be effected via the accelerator pedal as this is not possible by way of the control linkage.

⚠

Do **not** actuate the control linkage in the engine compartment with the ignition switched on, as faults would be recognized implausible and stored in the LH control unit.

Diagnosis

The LH control unit has the following diagnosis capabilities:

1. Diagnosis with fault memory

Faults occurring during engine operation are counted by a fault counter. Only if the fault persists after 4 starting operations will it be stored by the fault memory. In this way it is avoided that faults occurring only once are stored in the memory. If a fault for example occurs only three times, the fault counter is cancelled again after a certain number of starting operations.

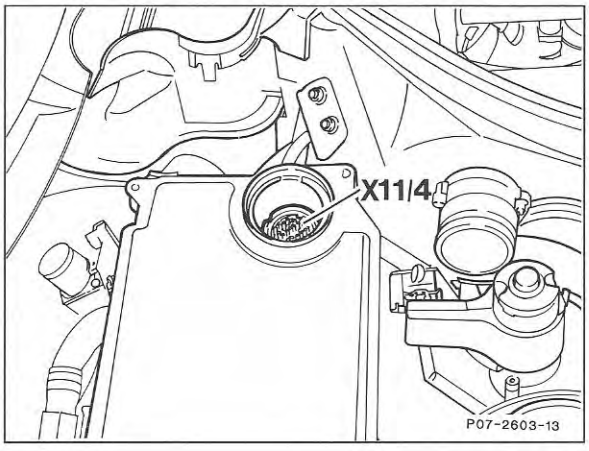

Only faults preventing starting of the engine or severely impairing engine operation will be stored immediately. The fault memory will not be deleted by disconnecting the battery.

The stored faults can be read out with the impulse counter on the diagnosis test coupling (X11/4) (see Diagnosis Manual Engine Volume 2).

⚠

Reading out of the fault memory must be done with the engine stopped and the ignition switched on.

courtesy of 500Eboard.com

2. Impulse ratio output

The impulse ratio is used to test the function of the lambda control and to identify non-stored faults prevailing at present.
Faults are distinguished between ignition On and engine at idle speed (see Diagnosis Manual Engine Volume 2).

Emergency running program (plausibility circuit)

The LH control unit is equipped with an emergency operation program. All input signals are continuously registered. If the input of these signals is no longer plausible, the control unit LH automatically forms a replacement value for the non-plausible signal. In this way it is ensured that the injection system continues to function almost without any problem. If for example the coupling is pulled off the coolant temperature sensor with the engine at operating temperature, the control unit recognizes interruption and changes to emergency operation. A gradual change of a value is identified by the control unit LH only if the value is implausible.

courtesy of 500Eboard.com

Data exchange via serial data bus (CAN)
The control units LH (N3/1), electronic accelerator (N4/1) and ABS/ASR (N30/1) as well as the EZL/AKR control unit (N1/3) are connected with a serial data bus (CAN).

CAN = Control Area Network

The control units are interlinked in parallel by means of two lines.

As a result of this, additional sensors and inputs and outputs on the control unit are no longer required. Data transmission occurs continually in information blocks. If a control unit transmits, the other control units receive and vice versa. The control units only receive data required by them. Important data are given preference in transmission (see data transmitted via the serial data line).

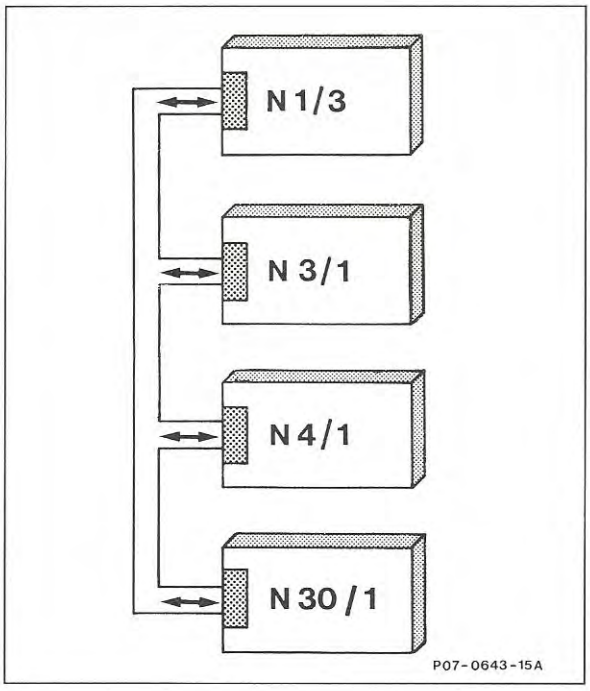

courtesy of 500Eboard.com

Data transmitted via the data line:

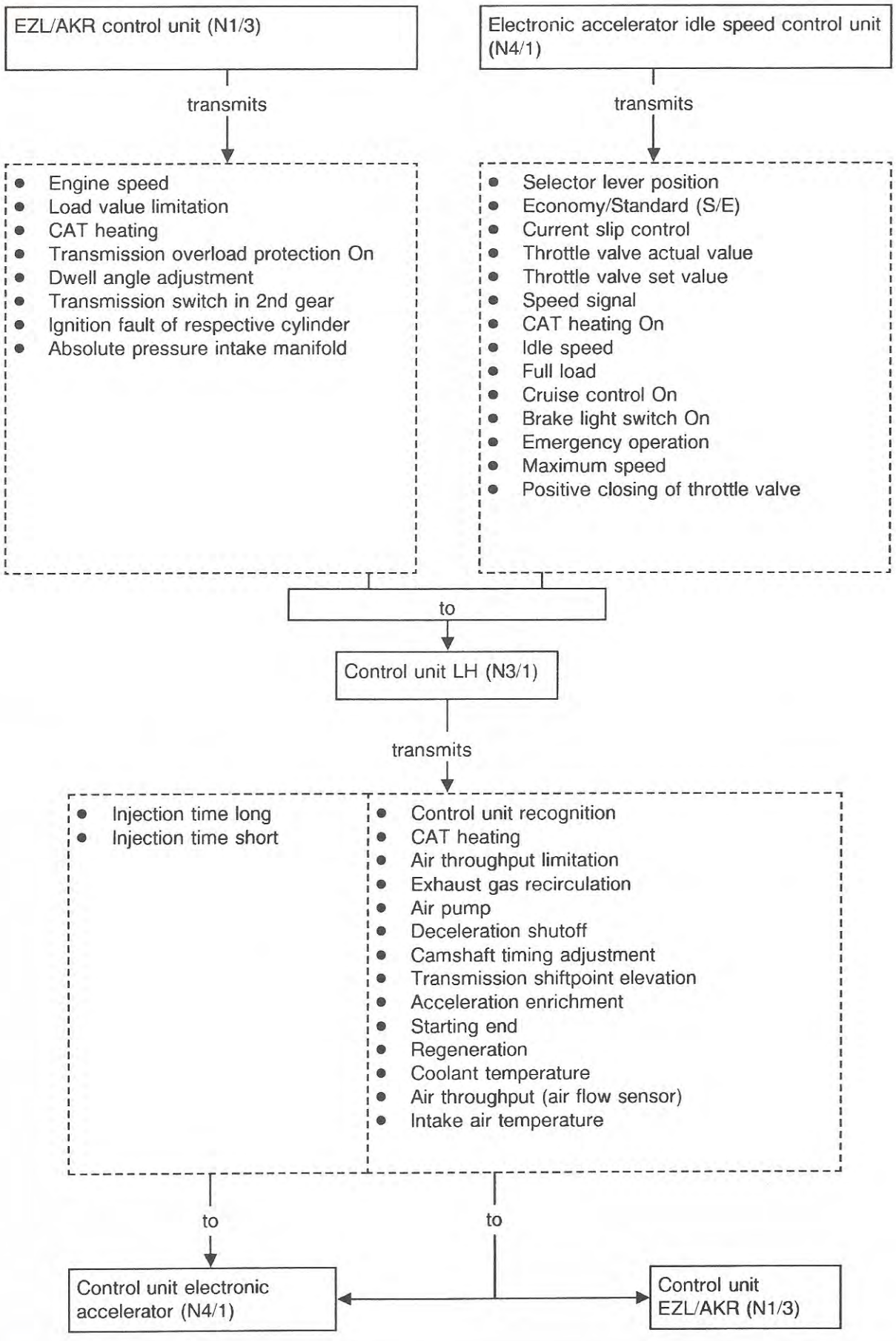

courtesy of 500Eboard.com

Belt drive

Poly-V-belt and pulleys with 8 grooves, belt length changed. Tension roller wider. Belt operation schematic changed due to changed arrangement of air pump, or return roller and alternator.

Belt operation schematic with air pump, with or without air conditioner

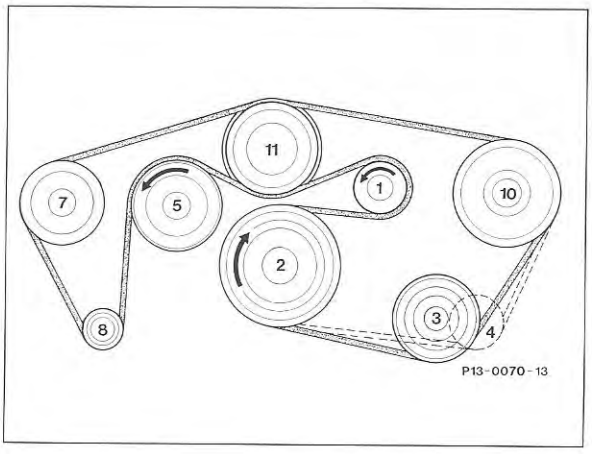

Belt length 2460 mm

1 Tension roller
2 Crankshaft
3 Refrigerant compressor
4 Return roller bottom
5 Fan
7 Air pump
8 Alternator
10 Power steering pump
11 Coolant pump

Belt operation schematic without air pump, with or without air conditioner

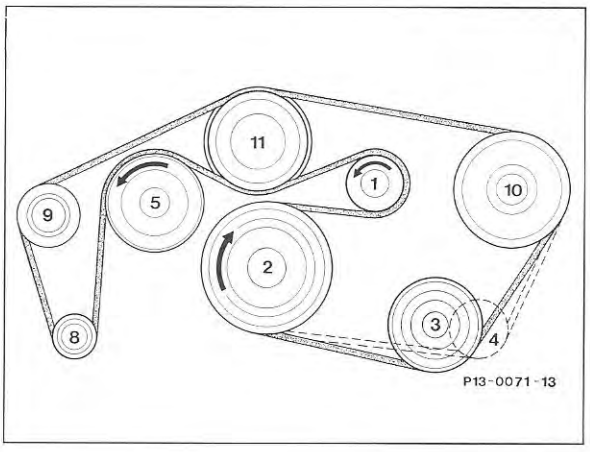

Belt length 2460 mm

1 Tension roller
2 Crankshaft
3 Refrigerant compressor
4 Return roller bottom
5 Fan
8 Alternator
9 Return roller top
10 Power steering pump
11 Coolant pump

Belt tensioner and bracket for refrigerant compressor or bracket for return roller bottom, adapted to 8-groove belt drive.

courtesy of 500Eboard.com

Intake manifold, exhaust manifold, emission control system

Intake manifold

- Connection fitting (1) for fuel vapours (from charcoal canister) and blow-by gasses.
- Longer swing pipes.
- Mounting eyes for fuel distribution pipe.

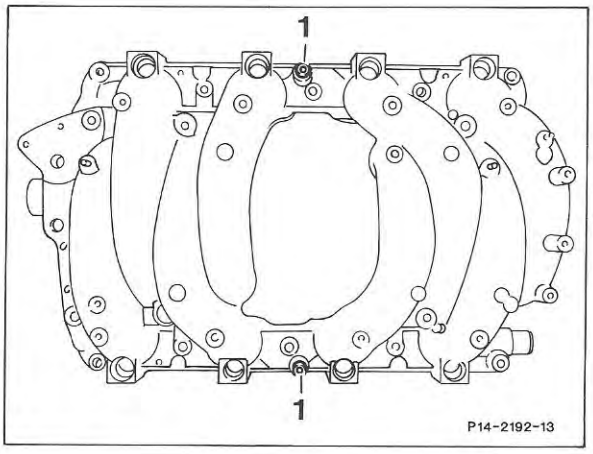

- Distribution passage (2) for fuel vapours and blow-by gasses to the right and left cylinder bank.

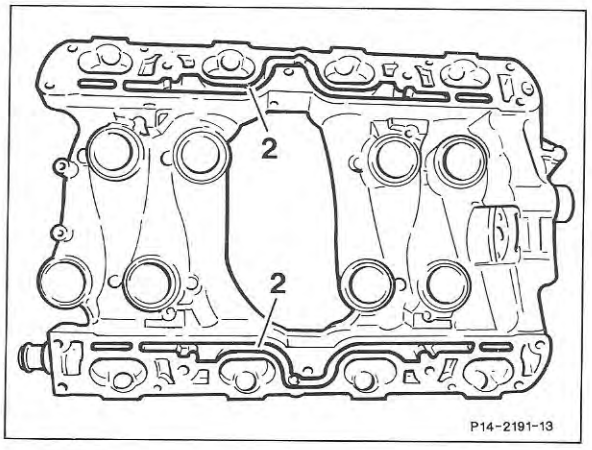

- Intake manifold gasket with orifice bores (3) for metered supply of fuel vapours and blow-by gasses to the individual cylinders.

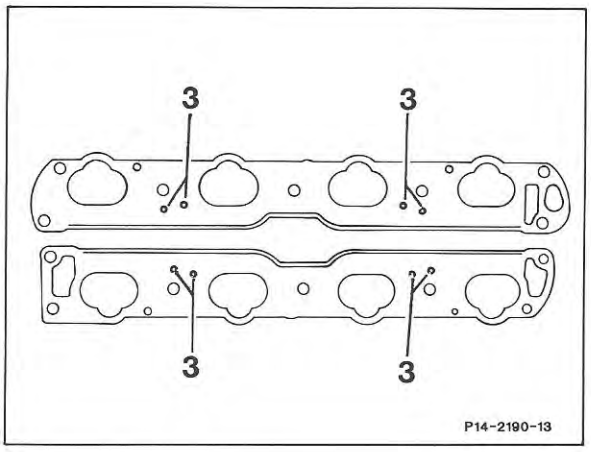

courtesy of 500Eboard.com

Exhaust manifold

The exhaust manifolds are modified in shape and center outlet corresponding to the space conditions in the engine compartment.

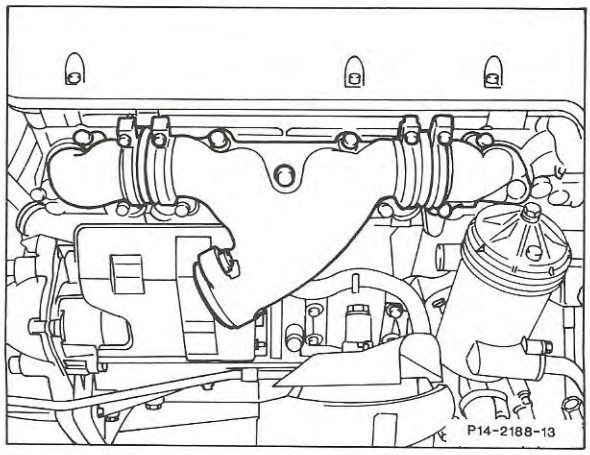

right side

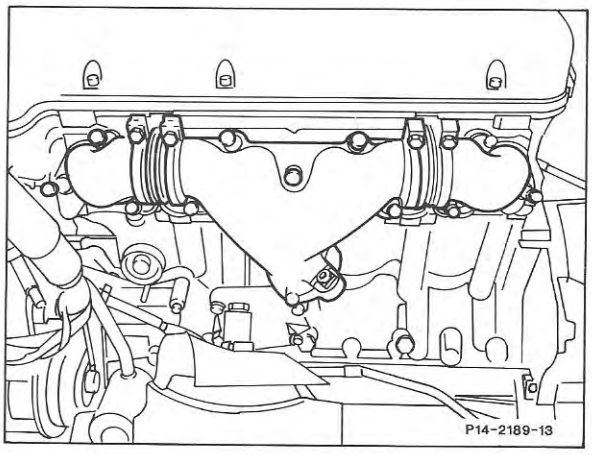

left side

courtesy of 500Eboard.com

Air injection, exhaust gas recirculation, vacuum supply

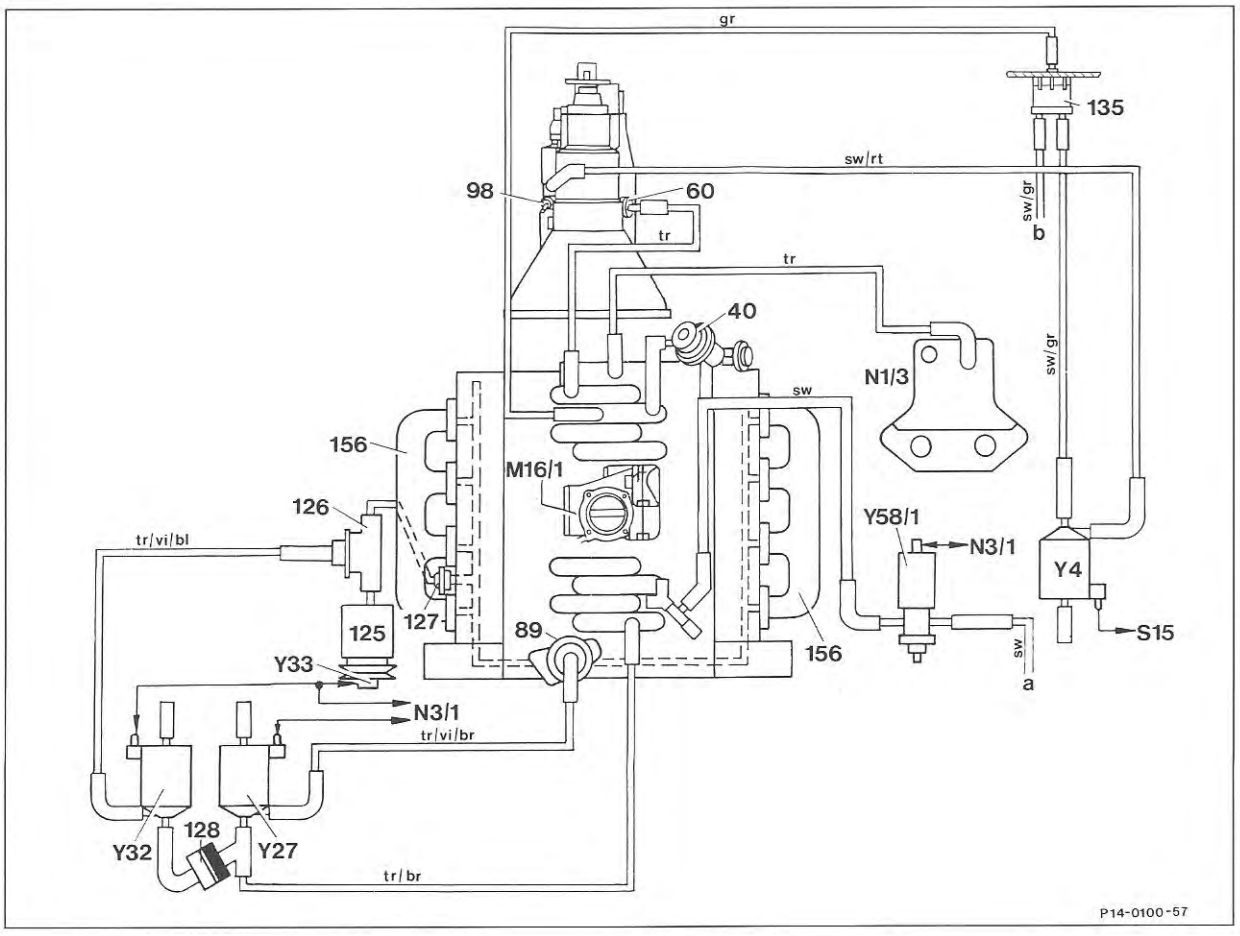

Function diagram air injection and exhaust gas recirculation as well as vacuum supply

40	Diaphragm pressure regulator	M16/1	Adjusting element electronic accelerator (EFP)
60	Vacuum unit	N1/3	Control unit EZL/AKR
89	Exhaust gas recirculation valve	N3/1	Control unit LH
98	Vacuum element for control pressure cable	S15	Switch 2nd driving program
125	Air pump	Y4	Change-over valve 2nd driving program
126	Air shutoff valve	Y27	Change-over valve exhaust gas recirculation
127	Check valve (injection air)	Y32	Vacuum valve air pump
128	Check valve (vacuum)	Y33	Electromagnetic clutch air pump
135	Check valve (vacuum supply)	Y58/1	Regeneration change-over valve
156	Exhaust manifold		
		a	Charcoal canister
		b	User

courtesy of 500Eboard.com

Air injection (only CAT version)

The air pump (125) is flanged on above the alternator. The air is drawn in by way of a maintenance-free dry air cleaner integrated in the air pump housing. The air quantity is divided behind the air shutoff valve (126) and injected into the air passages in the crankcase between cylinders 1 + 5.

The air injection occurs up to a maximum of 2 minutes after starting. It is operational:

- with coolant starting temperatures between +10 °C and +40 °C
- at engine speeds < 2500 rpm
- when a certain air flow is not exceeded.

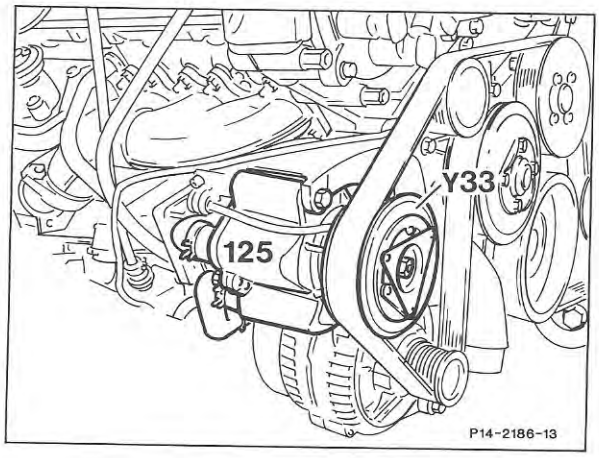

Exhaust gas recirculation

The exhaust gas recirculation valve (89) is mounted on the intake manifold. The exhaust gas tapping point is located in the exhaust duct of No. 1 cylinder. Via a gallery in the cylinder head the exhaust gas is directed to the exhaust gas recirculation valve. From there it is directed into the intake manifold.

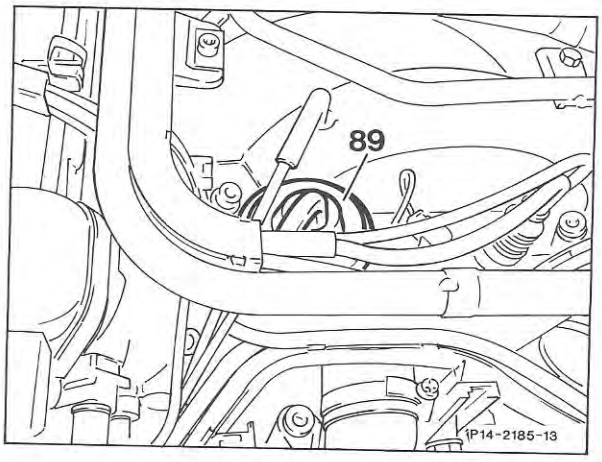

The exhaust gas recirculation is controlled by the LH control unit via the exhaust gas recirculation change-over valve (Y27).

The exhaust gas recirculation is operational:

- at coolant temperatures > 65 °C
- not during full throttle operation
- not at idle speed

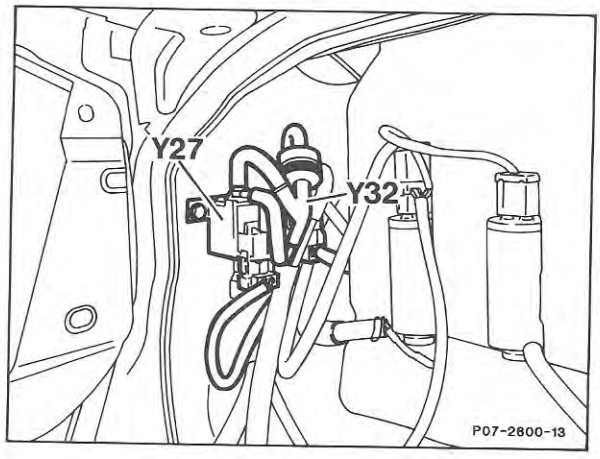

courtesy of 500Eboard.com

Electrical system, engine

Electronic ignition system with ignition characteristic adjustment and anti-knocking control (EZL/AKR)

Basic description of ignition system with ignition characteristic adjustment and anti-knocking control (EZL/ AKR):
Repair instructions Engine 119, Combustion LH injection, Group 15-0511.

Arrangement of components

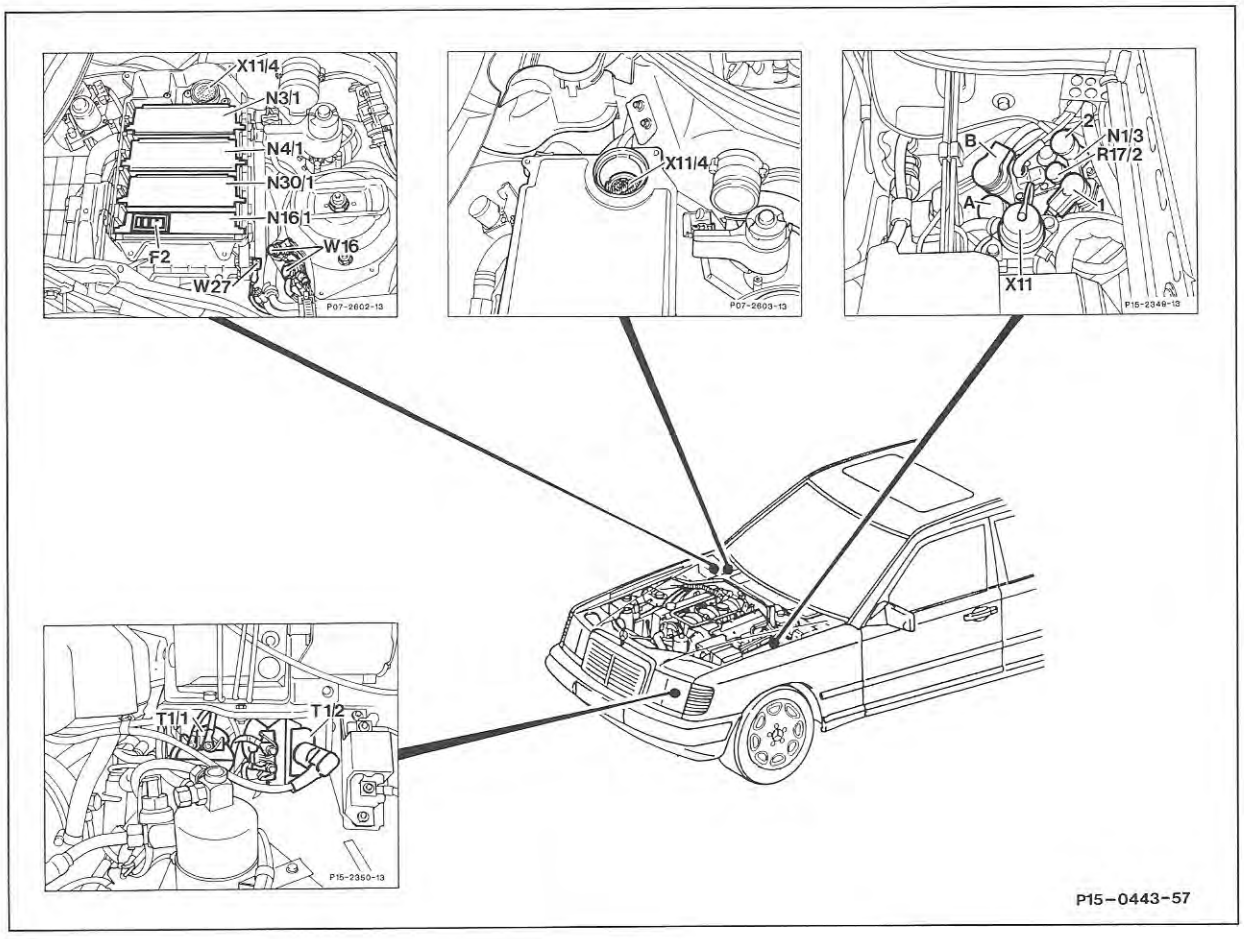

Components in engine compartment

N1/3	Control unit EZL/AKR
N3/1	Hot wire control unit (LH)
N4/1	Electronic accelerator control unit (EFP)
N16/1	Basic module/overvoltage protection
T1/1	Ignition coil 1 (right cylinder bank)
T1/2	Ignition coil 2 (left cylinder bank)
X11/4	Diagnosis test coupling 38-pole (impulse signal)

courtesy of 500Eboard.com

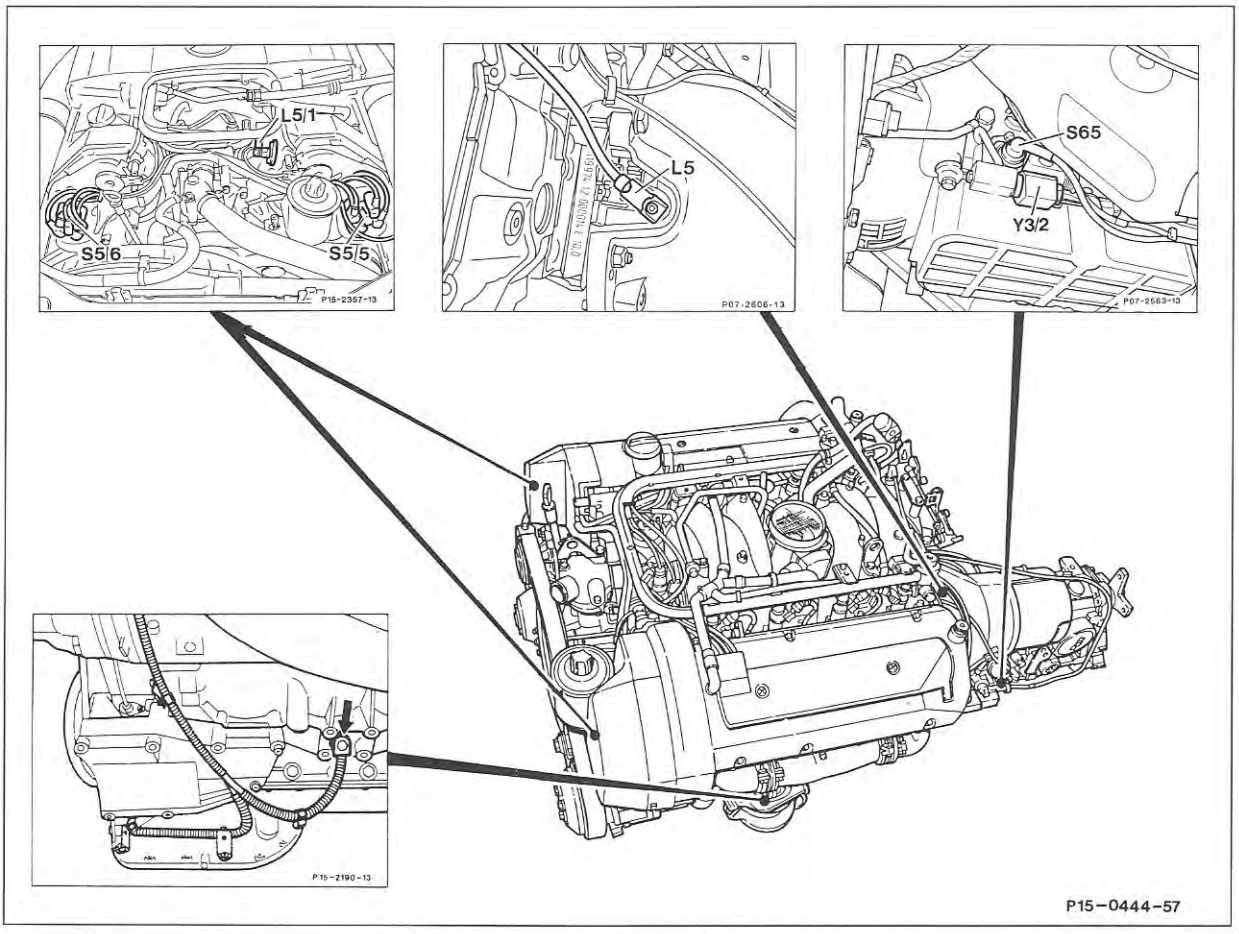

Components on engine

A16	Knocking sensors	S5/5	High-voltage distributor left
L5	Crankshaft position sensor	S5/6	High-voltage distributor right
L5/1	Camshaft position sensor	S65	Transmission overload protection switch

courtesy of 500Eboard.com

Block wiring diagram EZL/AKR

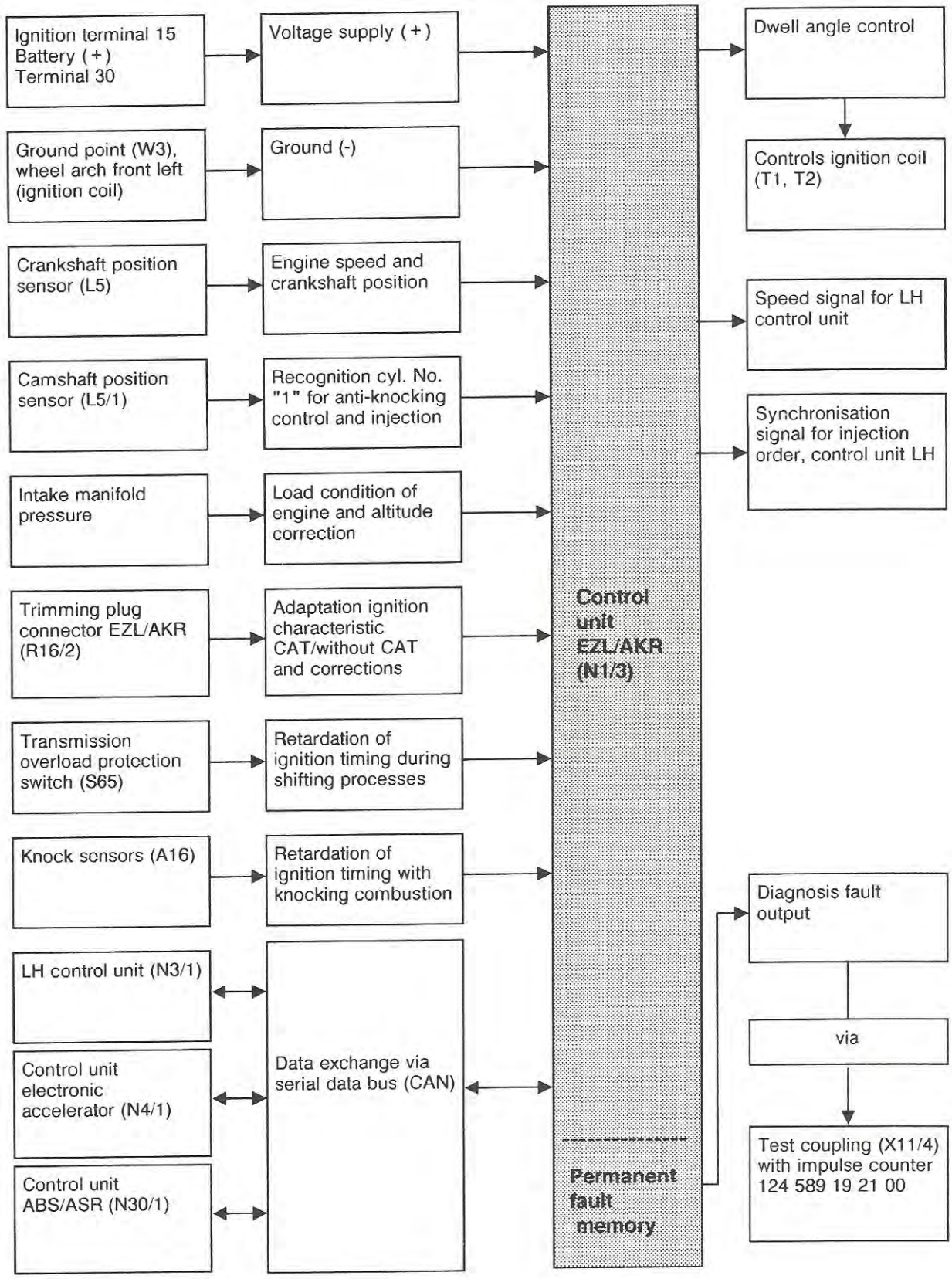

courtesy of 500Eboard.com

Control unit EZL/AKR

Fault memory and data exchange expanded. The stored faults remain in the memory even after the battery has been disconnected (permanent store).

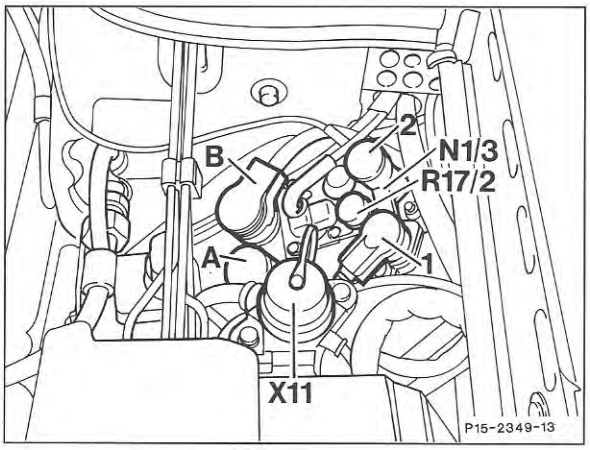

Idle speed/full load signal
The idle speed or full load position of the throttle valve is registered by the set value potentiometer of the adjusting element of the electronic accelerator and fed into the electronic accelerator control unit. From there the signal is passed on to the EZL/AKR control unit via the serial data bus (CAN).

TN signal (engine speed)
The signal is directed from the EZL/AKR control unit to the LH control unit, and from there to the basic module overvoltage protection.

Synchronisation signal for injection system
In order to achieve the correct allocation of the injection timing to the relevant cylinder, the injection order must be synchronised. This requires the signal of the position sensor (L5/1). The camshaft position sensor generates two alternating voltage signals for each camshaft revolution. These are processed into rectangular signals in the EZL/AKR control unit and passed on to the LH control unit. The synchronisation is effected during the starting process up to an engine speed of 600 rpm.

courtesy of 500Eboard.com

Coolant temperature signal
The signal is given to the EZL/AKR control unit by the LH control unit via the serial data bus (CAN).

Adjustment coupling for EZL/AKR control unit
The ignition is adjusted for unleaded premium fuel with octane number RON 95.
With frequent use of regular fuel with octane number RON 91, e.g. abroad, a suitable trimming plug connector must be mounted (see table).

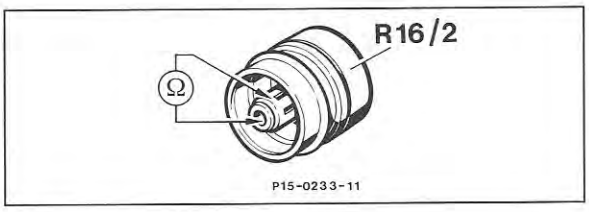

Note
When using regular fuel the ignition timing is retarded by the anti-knocking control. This increases the overall temperature level of the engine.

Regular fuel should therefore be used only if no unleaded premium or premium plus is available in exceptional cases (see also operating instructions).

Version	Fuel RON	Trimming plug connector [1] Part no.	Resistance Ω/kΩ	Ignition timing correction ° crank angle (without vacuum)
CAT	Premium 95	015 545 67 28	2.4 kΩ	0
Without CAT	Premium 95	015 545 71 28	220 Ω	0
CAT	Regular 91	015 545 68 28 [2]	1.3 kΩ	- 3
CAT	Regular 91	015 545 69 28 [3]	750 Ω	- 6
Without CAT	Regular 91	015 545 70 28	470 Ω	- 4

[1] If no adjustment coupling is available, the ignition timing at full load is retarded by approx. 3° crank angle.
[2] With frequent regular fuel operation
[3] With pinging complaint using regular fuel

courtesy of 500Eboard.com

Firing order

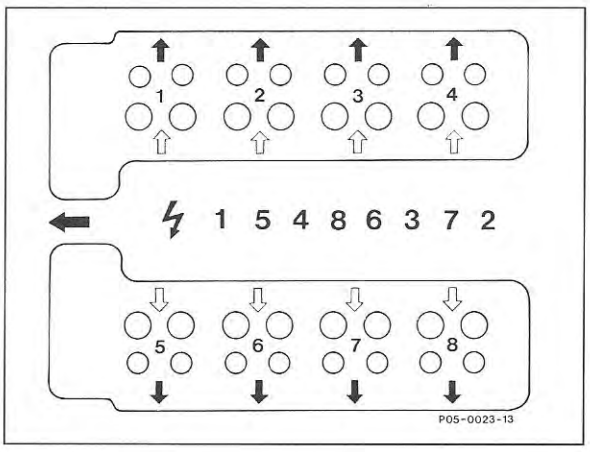

Camshaft position sensor

Two position indicators are arranged on the camshaft sprocket offset relative to one another. This produces a cylinder recognition for the synchronisation of the injection sequence and for the anti-knocking control with each crankshaft revolution.

The synchronisation of the injection sequence with the cylinders takes place during the starting process. In order to obtain a strong signal even at starting speed, the air gap between position sensor and position indicator must only be 0.4-0.6 mm.
During repairs the air gap must be checked and adjusted with spacers if required (see Repair instructions Engine 119 with LH injection, Group 15-2143).

courtesy of 500Eboard.com

Catalytic converter heating

In order to bring the catalytic converter faster to its operating temperature, the exhaust gas temperature is increased.

To achieve this, the ignition timing, at idle speed and selector lever in P or N positions, is continuously retarded for approx. 30 seconds as a function of temperature and the idle speed increased by the idle speed control to 1100-1200 rpm at a coolant temperature between approx. +15 °C to +40 °C after each start. The idle speed increase is reverted to normal when a driving position is engaged.

Fuel shutoff in the case of ignition faults
(phased-in implementation)

In order to protect the catalytic converter from overheating, all injection valves of the ignition circuit concerned are switched off if ignition faults occur in a primary power circuit.

The following faults are recognized by the primary current monitoring arrangement in the EZL/AKR control unit and transferred to the LH control unit via the data line:

- Final ignition stage in ignition control unit defective.
- Ignition coil defective or line interruption.

Faults occurring after the ignition coil will not be registered.

courtesy of 500Eboard.com

Engine torque reduction with ASR controlled operation

In order to achieve an immediate engine torque reduction with spinning wheels, the ignition timing at driving speeds of 20-120 km/h and a coolant temperature above 50 °C is briefly retarded during the first ASR control operation.

The EZL/AKR control unit receives the control signal via the serial data bus (CAN) from the ABS/ASR control unit via the control unit electronic accelerator.

Diagnosis fault storage

The EZL/AKR control unit is equipped with a diagnosis with fault memory. The stored faults remain stored even after switching off the ignition or disconnecting the battery (permanent store).
The fault impulses are output via the test coupling (X11/4) for diagnosis 38-pole (impulse signal).

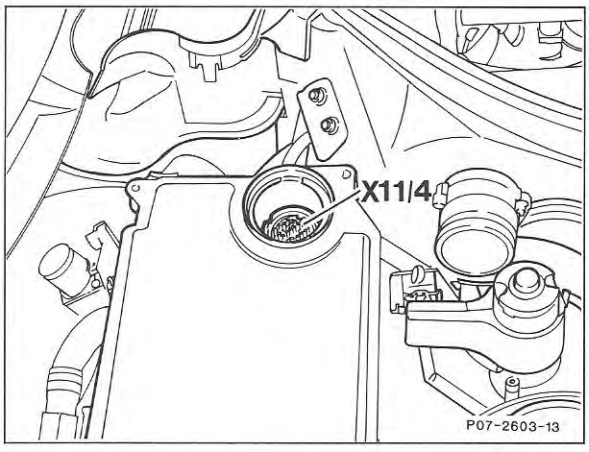

Function
Faults occurring during engine operation are counted by a fault counter. Only if the fault is still present after 8 starting operations will it be stored by the fault memory. In this way it is avoided that faults occurring only once are stored. If for example a fault occurs only three times, the fault counter will be cancelled after a certain number of starting operations.

courtesy of 500Eboard.com

Only faults preventing the starting of the engine or severely influencing engine operation will be stored immediately.

The stored faults can be read out with the impulse counter at the diagnosis test coupling (X11/4) (see Diagnosis Manual Engine Volume 2, register 5).

⚠
Reading out the fault memory must be conducted with engine switched off and ignition switched on.

The following control units of engine management are interlinked in the communication network via a serial data bus (CAN):

- Injection system (N3/1)
- Ignition system (N1/3)
- Electronic accelerator/idle speed control (N4/1)
- Anti-locking system/acceleration skid control (N30/1)
  (Details see function description injection system LH, 07.4)

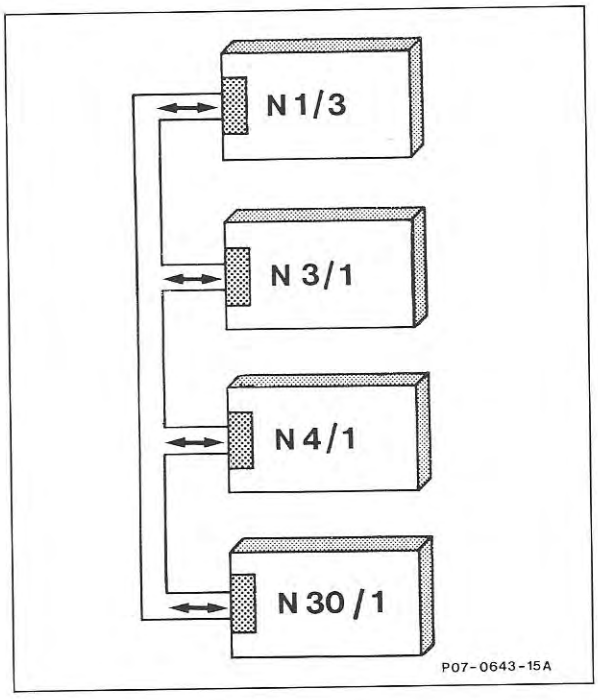

courtesy of 500Eboard.com

Alternator

120 A compact alternator with the designation NC 14 V 60/120 A.

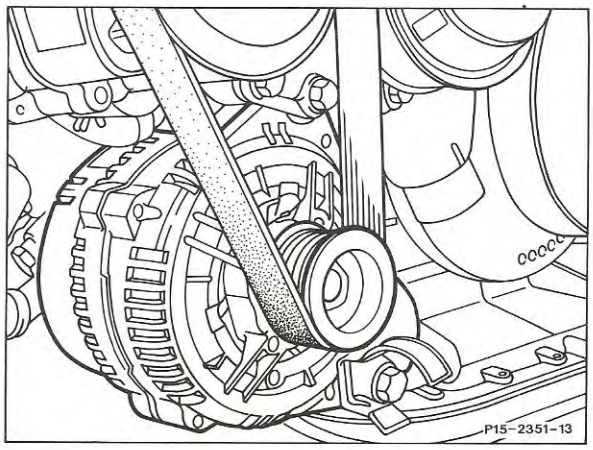

Charge current

Engine speed	Alternator speed	Charge current
2180 rpm	6300 rpm	120 A

Transmission ratio engine/alternator

i = 2.9

Starter motor

Geared starter motor DW 12 V 1.7 kW.

courtesy of 500Eboard.com

Engine lubrication, engine cooling

Oil pump

Oil suction strainer and oil level sensor position changed.

Oil pressure sensor

Oil pressure sensor 1-pole, arranged on steel line, oil pressure gauge as model 124 up to now.

Engine oil cooler

Transverse engine oil cooler arranged at the front.
Both oil cooler hoses changed.

Oil dipstick guide tube

Changed shape.

courtesy of 500Eboard.com

Engine cooling, coolant hoses, radiator

Radiator

Transverse radiator with 29.8 dm^2 cooling surface with integrated transmission oil cooler on the right. Coolant hose installation from right to left on bottom oil pan.
2 electric auxiliary fans in front of the condenser of the standard air conditioner.
Screw-type radiator console.

Coolant pump

8-groove belt pulley.

Viscofan clutch

Switching-on temperature 82 °C, was 96 °C.
The housing of the viscofan clutch was changed, changing the fan position by 8 mm in the direction of the engine. Covering hood adapted to changed housing, open in the front center.
Code figure of bimetallic spring 119 200 01 22.

Fan shroud

Fan shroud with lateral air flaps, adapted to the space conditions, transverse split in the center.

Inlet fitting heater return

The inlet fitting is flanged to the crankcase rear right, previously bolted.

courtesy of 500Eboard.com

Engine suspension

Front engine mounts

Hydraulically dampened engine mounts with air cooling via air ducts.
Shield plates left and right.

Engine support bracket

Adapted to the changed installation conditions.

Rear engine mounts

Round rubber mounts on aluminum die cast cross member.

courtesy of 500Eboard.com

Automatic transmission

The known automatic transmission 722.3 is installed.

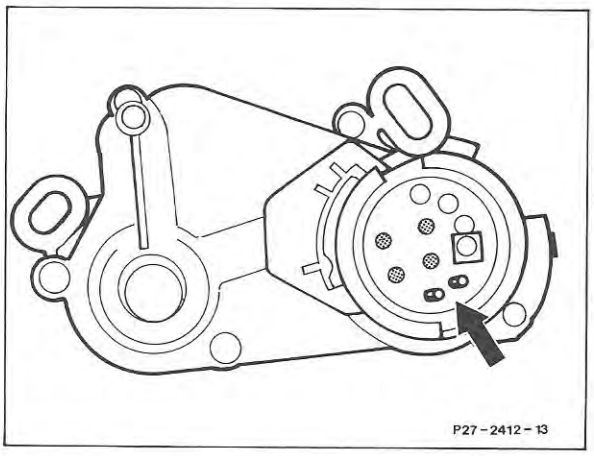

Starter lockout switch

The starter lockout switch (S16/3) is new. It is provided with two additional plugs (arrow) for identifying the selector lever position for the cruise control.
Testing see Diagnosis Manual Engine Volume 2, register 6.

Center shift

With individual gear display as known from model 129.

Adjusting control pressure cable

⚠
Engine control must be adjusted properly.

1 Remove air cleaner.

2 Loosen hex. nuts (6) from the connecting rod (8).

3 Twist connecting rod (8) so that the tips of the pointers are exactly opposite.

4 Secure hex. nuts (6).

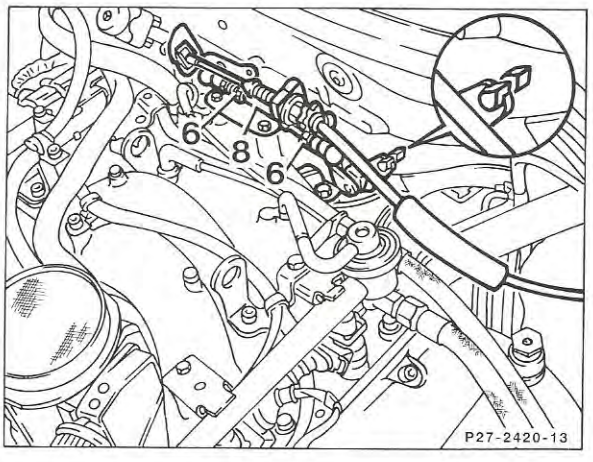

courtesy of 500Eboard.com

Installation survey, testing and pressure values

Transmission		722.365	722.365
Version		CAT	without CAT
Transmission	Part no.	140 270 09 00	140 270 00 00
Shift valve housing	Part no.	140 270 06 07	140 270 06 07
Vacuum unit	Color	black	black
Modulating pressure	bar	4.0	4.1
Working pressure	bar	13.8 ± 1	13.8 ± 1
Governor pressure in bar	at 30 km/h at 90 km/h	0.75 2.2	0.75 2.2
Converter dia.	mm	290	290

Shiftpoints in selector lever position "D"

Model	Accelerator position	Shift at km/h (approx. values)													
		1→2		2→3		3→4		4→5		5→4		4→3		3→2		2→1	
		E	S	E	S	E	S	E	S	E	S	E	S	E	S	E	S
124.036	Full throttle	–	46	60	104	125	163	–		–		64	114	28	40	–	24
	Kickdown	67		112		169		–		–		153		92		38	

courtesy of 500Eboard.com

Electronic accelerator

Arrangement of components

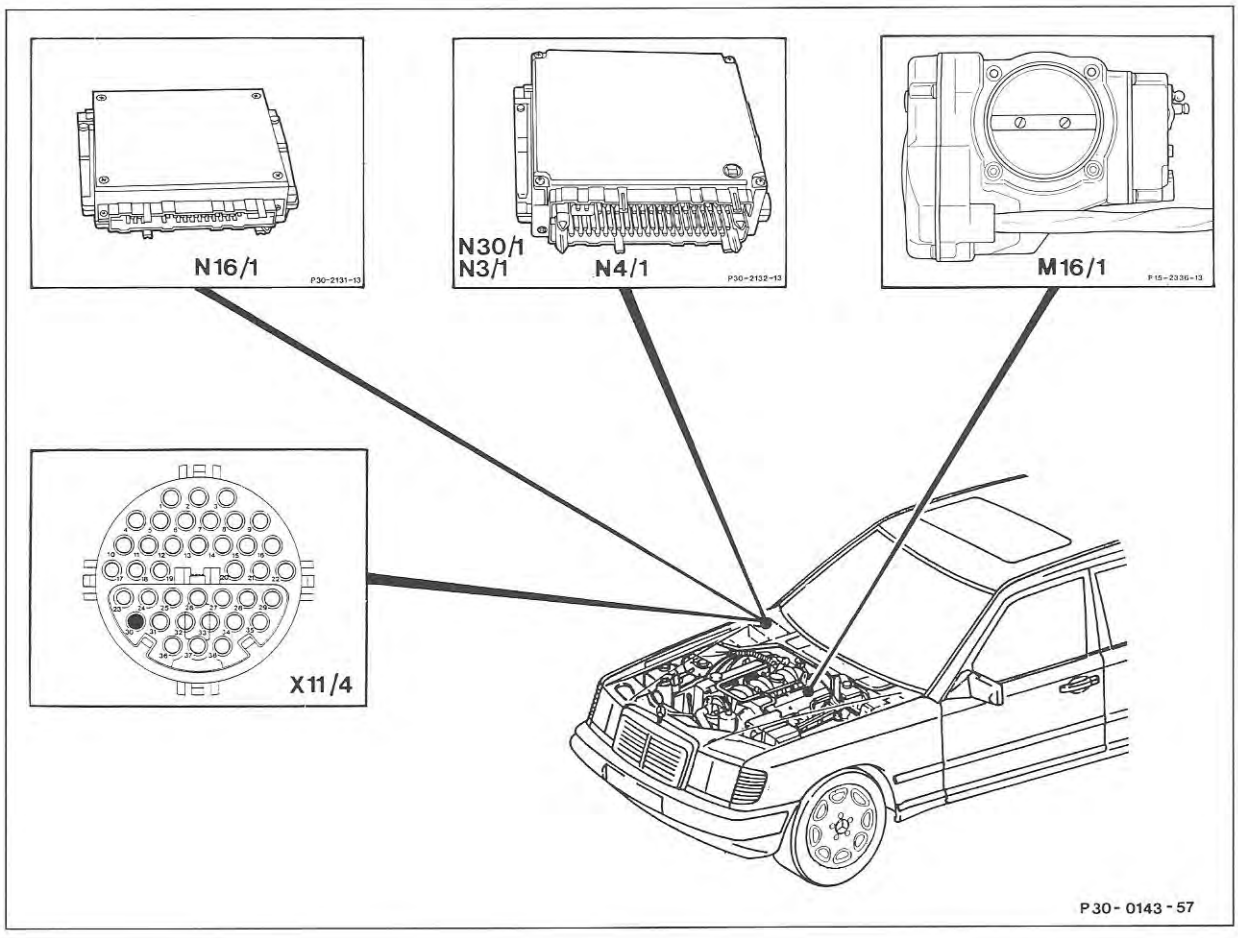

M16/1	Adjusting element electronic accelerator (EFP)	N16/1	Basic module (GM)/overvoltage protection
N3/1	Hot wire control unit (LH)	N30/1	Control unit ABS/ASR
N4/1	Control unit electronic accelerator (EFP)	X12/4	Diagnosis test coupling 38-pole (impulse signal)

courtesy of 500Eboard.com

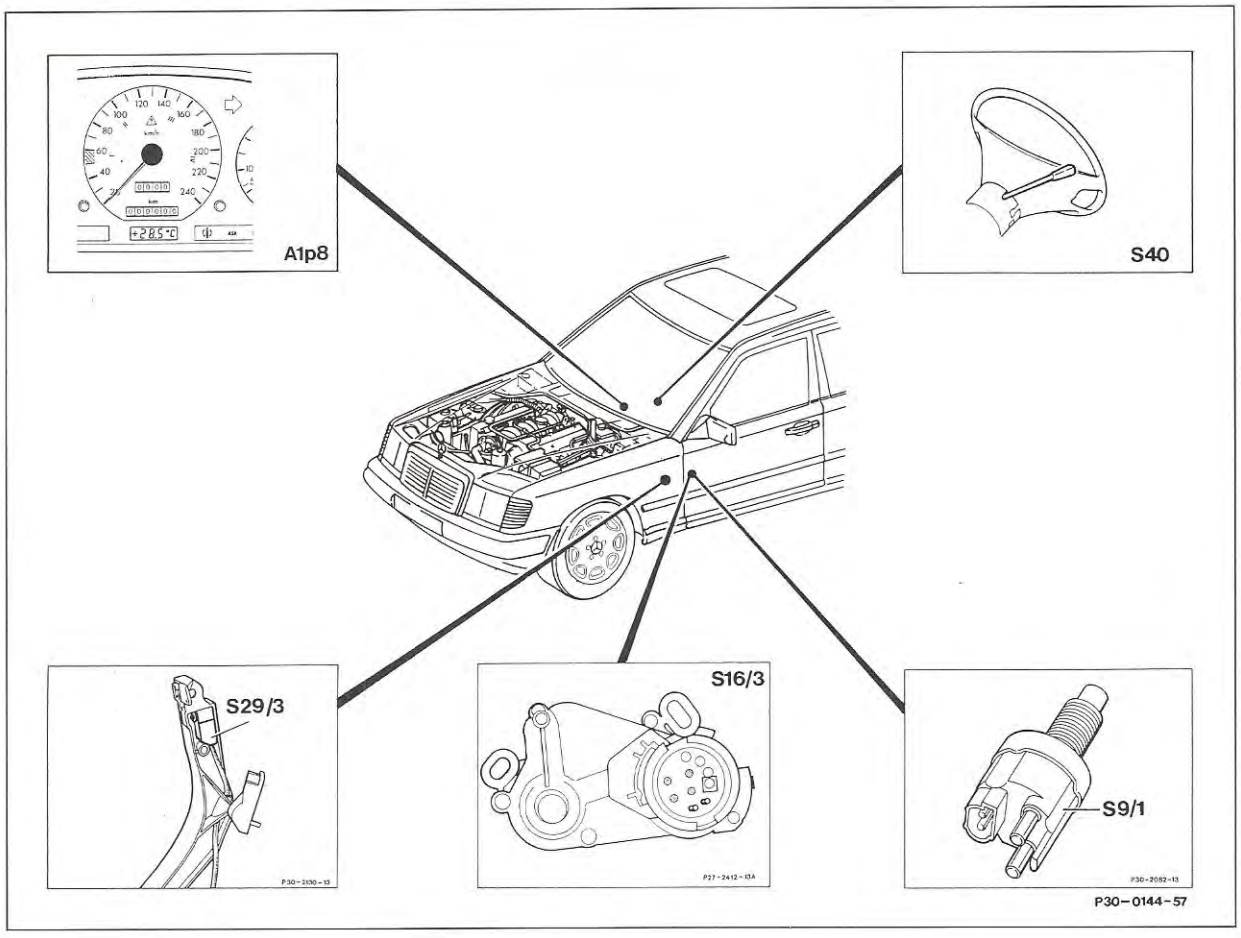

A1p8	Electronic speedometer
S9/1	Brake light switch
S16/1	Starter lockout and back-up light switch
S29/3	Idle speed contact switch
S40	Touch-button switch cruise control
	V Decelerating locking
	SP Accelerating/locking
	A Switching off

courtesy of 500Eboard.com

Function electronic accelerator

The control unit electronic accelerator incorporates the functions

- Idle speed control
- Cruise control
- Electric, electronic engine control (electronic accelerator).

The components of electrics/electronics together with the mechanical components serve to carry out all control operations as well as the mechanical adjusting movements. The electric/electronic components receive the necessary voltage from the basic module via terminal 87 unfused.
Signals are fed into the control unit electronic accelerator from the following components:

- Basic module (N16/1)
- Control unit ABS/ASR (N30/1)
- Control unit LH (N3/1)
- Ignition control unit EZL/AKR (N1/2)
- Idle speed contact switch (S29/3)
- Adjusting element electronic accelerator (M16/1) (with throttle assembly)
- Brake light switch (S9/1)
- Starter lockout and back-up light switch (S16/4)
- Touch-button switch cruise control (S40)
- Switching-on signal refrigerant compressor
- Data exchange via serial data bus (CAN) between the control units ABS/ASR, control unit LH and ignition control unit EZL/AKR
- Speed sensor

The input signals are processed and monitored in the control unit electronic accelerator. The output signals are directed to the following components:

- Adjusting element electronic accelerator (with throttle assembly)
- Control unit ABS/ASR
- Control unit LH
- Ignition control unit EZL/AKR
- Impulse output (fault memory) via diagnosis socket 38-pole (X11/4)
- Data exchange via serial data bus (CAN) between control units ABS/ASR, control unit LH and ignition control unit EZL/AKR.

The electronic accelerator and the integrated idle speed control is operational when the ignition is switched on. The control unit recognizes the position of the accelerator via the set value potentiometer in the adjusting element. The throttle valve position is reported by the actual value potentiometer. The control unit electronic accelerator checks the signals and determines the position of the throttle valve by means of the output signal. If the accelerator pedal is not actuated, the position of the throttle valve is preset as a function of coolant temperature (signal from control unit LH via serial data bus) prior to starting. From the entire adjusting range of the throttle valve (idle speed stop to full throttle stop) the opening angle is limited by the electronic accelerator control unit for the idle speed control.

courtesy of 500Eboard.com

For the electronic accelerator facility, the position of the accelerator (set value) is reported to the control unit by the adjusting element via the set value potentiometer. An output signal to activate the adjusting element is allocated to this set value in the control unit. The adjusting element and consequently the throttle valve therefore assumes a position corresponding to the set value. The control linkage is connected with the throttle valve via the output lever and the inner spring capsule by means of a loose connection. The opening angle of the throttle valve corresponds to the input set value, while a certain torque is transmitted from the engine to the drive wheels. If the input set value (accelerator pedal deflection) is higher than the drive moment transmitted onto the road, this means the wheels are spinning. This spinning is recognized by the ABS/ASR control unit and reported to the electronic accelerator control unit via the serial data bus in form of a signal (throttle valve reduction). In addition to this, the ignition timing is retarded by the signal from the serial data bus to the ignition control unit in order to obtain immediate torque reduction.

Excessive throttle opening will result in the drive moment being reduced until the slip on the drive wheel falls below a set value.

If drive wheel slip occurs when taking the foot off the accelerator, this will also be recognized by the ABS/ASR control unit. The signal (throttle valve increase) is also reported to the electronic accelerator control unit via the serial data bus. With this information the drive moment can be changed so that no slip is created on the drive wheels, in this way stabilizing the lateral guidance of the vehicle.

The electronic accelerator facility allows adjustment of the throttle valve between idle speed and full throttle or, closing in idle speed direction by ASR or slight opening by MSR for a short period.

If the drive moment on the drive wheels is too high (ABS control), the spiral spring in the spring capsule of the adjusting element permits the adjustment of the throttle valve contrary to accelerator position.

With an MSR control the control cable permits an adjustment in accelerator pedal direction to a small extent.

The idle travel in the adjusting element (between spring capsule and adjusting lever) is an emergency driving feature which ensures continued operation with reduced engine output if the electronics fail.

Features:

- Throttle valve adjustment is always effected via the electric/electronic device.
- Cruise control system (Tempomat) is included in the electronic accelerator control unit.
- Idle speed control is included in the electronic accelerator control unit.
- Upon failure of electrics/electronics continued operation is possible with reduced engine output.

courtesy of 500Eboard.com

Block diagram electronic accelerator

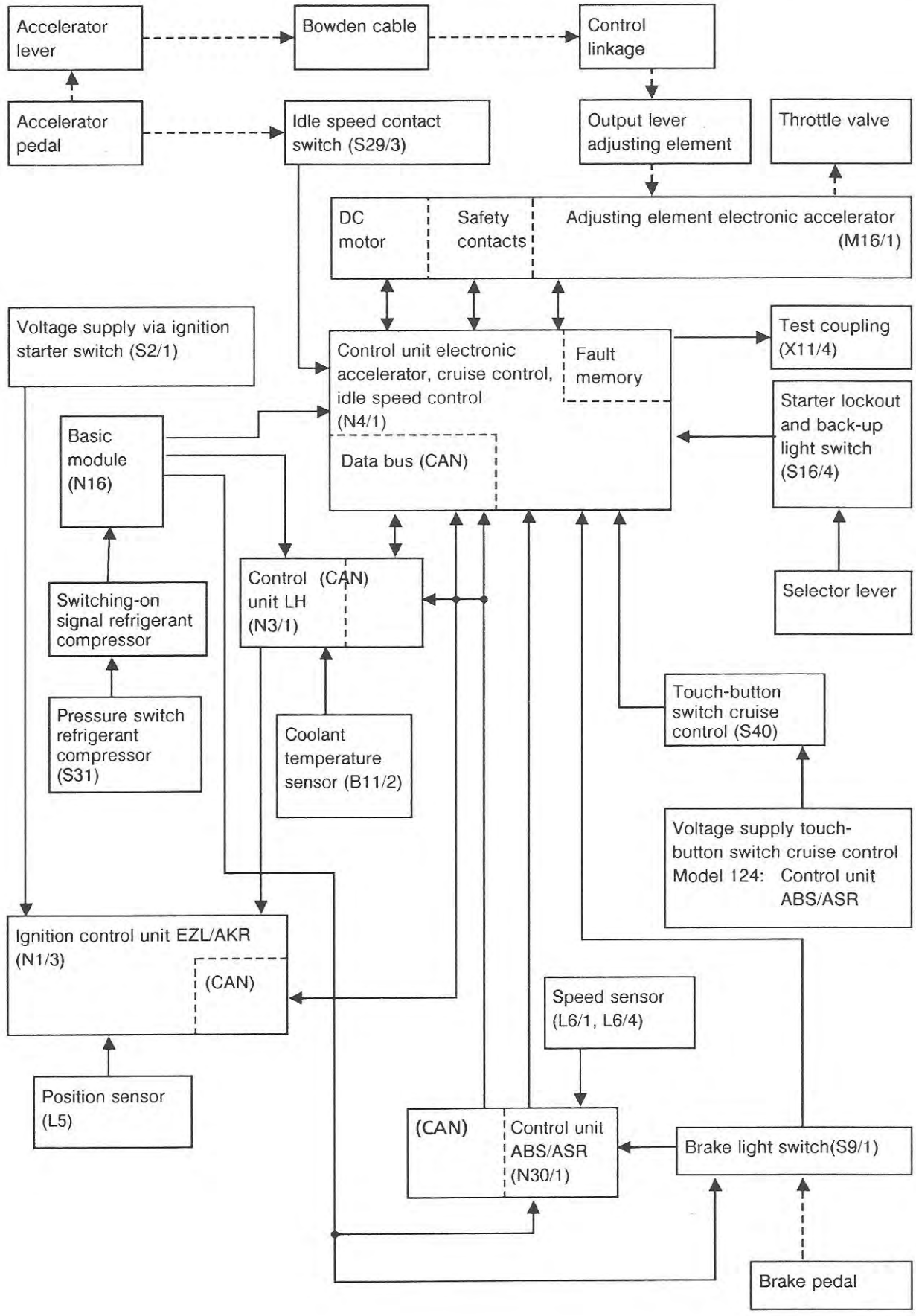

courtesy of 500Eboard.com

Idle speed control

Idle speed control is by means of the electronic accelerator control unit. For this purpose the following information is processed:

- Engine speed (TNA)
- Coolant temperature
- Speed signal
- Selector lever position automatic transmission
- Switching-on signal refrigerant compressor

As a function of the mentioned input signals, an output signal in the idle speed control assembly is passed to the set value selection. This evaluates the idle speed signal together with the other available signals. With the output signals the position controller and the serial data bus (CAN) are activated. The monitoring device checks the signals and activates the final stage via the release/switching-off facility and the throttle valve position is determined in this way.

An exchange of information takes place between the control units electronic accelerator, LH control unit and AKR/EZL ignition control unit by way of the serial data bus.
The control unit electronic accelerator provides the set speed.

If a control deviation occurs, the idle speed control is supported by the ignition control unit by changing the ignition timing. In this way the ignition timing can be retarded by up to 20°.

The signal from the data bus also supplies the control unit LH with information. The control unit LH then calculates the required injection time. At idle speed and stationary vehicle (speed signal = 0) the control unit electronic accelerator automatically calculates the air throughput depending on the engine operating condition (e.g. coolant temperature, selector lever position).

Consequently optimum idle speed stability is guaranteed under all operating conditions.

The idle speed is continuously regulated as a function of coolant temperature (table serves only as a guide).

Coolant temperature	Driving position without gear	Driving position with gear
< 0 °C	800–900/min	750–850/min
> 0 °C ≤ 30 °C	700–800/min	650–750/min
> 30 °C ≤ 40 °C	700–650/min	650–550/min
> 40 °C	650/min	500/min

The idle speeds with and without gear are different. They are determined according to the selector lever position via the electronic accelerator control unit.

courtesy of 500Eboard.com

Heating speed

The heating speed is available for approx. 20 seconds in the temperature range from +20 °C to +30 °C during each starting process (idle speed recognition and selector lever in positions P or N). The engine speed is 1000 ± 100 rpm.

Idle speed stabilization on engines with refrigerant compressor

Voltage is available on the electronic accelerator (terminal 16) when the air conditioner is switched on. The switching-on signal is fed into the electronic accelerator control unit via the basic module (approx. 350 ms). The control unit processes the available voltage and sends a corresponding signal to the set value selection. The opening cross section becomes greater before the refrigerant compressor is switched on, so that the idle speed remains almost constant during this process.

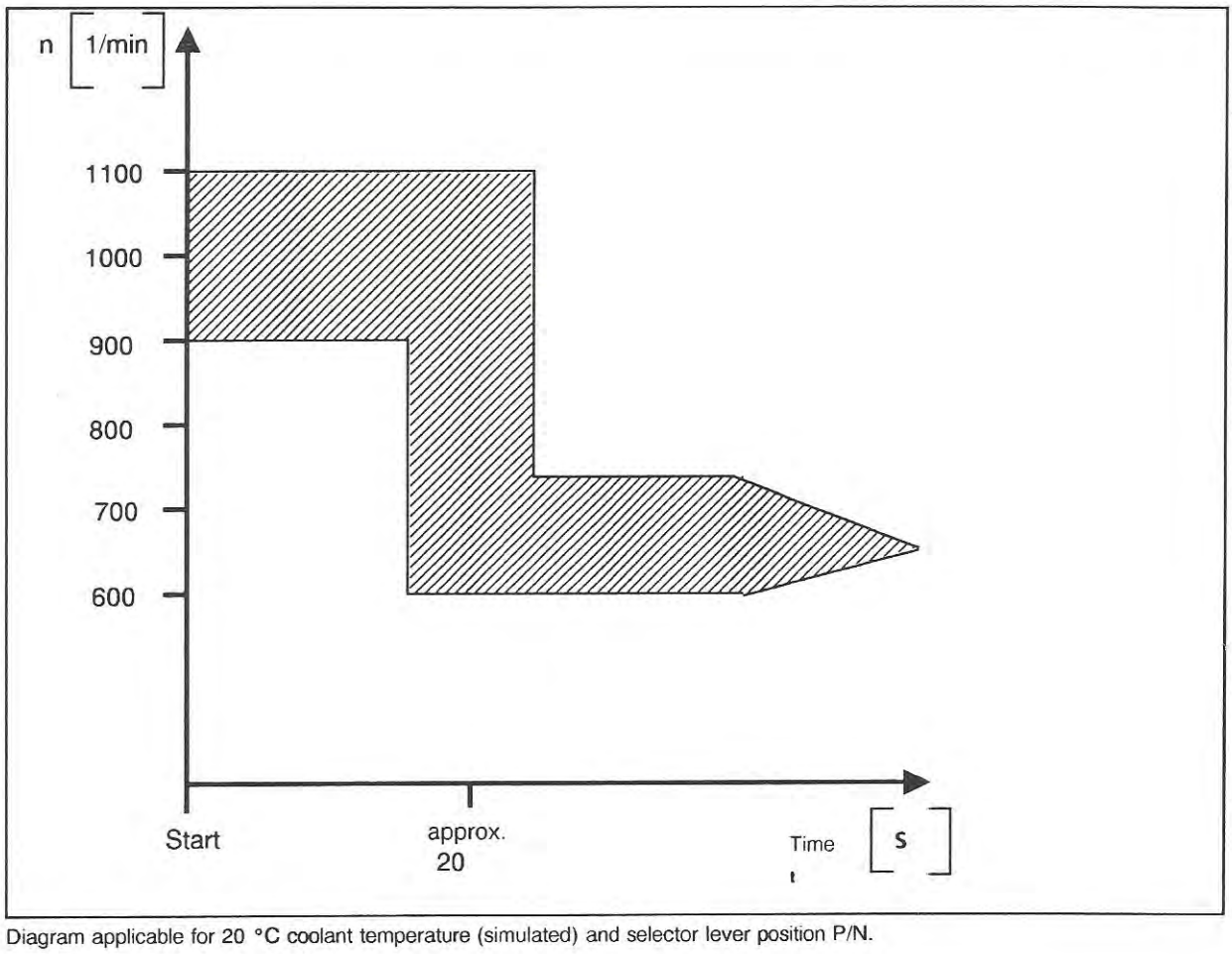

Diagram applicable for 20 °C coolant temperature (simulated) and selector lever position P/N.

courtesy of 500Eboard.com

Information on towing, test and repair jobs

- For operation (07-1203) checking output and emission, the following must be observed:
  - Ignition off
  - On test coupling (X11/4) bridge between jacks 6 and 1. Consequently control unit ABS/ASR in diagnosis mode.
  - Ignition on, check output and emission. As long as the diagnosis mode is activated, the indicator lamps ABS/ASR light up.
  - Ignition off. Remove bridge.

- Connector adjusting element watertight. It must **only** be **opened** during the testing operations mentioned in the test program.

- Cleaning agent or contact spray must **not** be used with the adjusting element connector.

- Control unit electronic accelerator is **not** protected.

- When welding with an electronic welding machine, observe the following:
  - Disconnect negative battery terminal.
  - **Directly** connect ground terminal of welding machine with the part to be welded.

courtesy of 500Eboard.com

Trailer operation

This model is not intended for trailer operation. Consequently no trailer towing device is available, not even for subsequent installation.

courtesy of 500Eboard.com

Spring suspension

General

The vehicle level was lowered by 23 mm. The lowering and the greater weight resulted in changes to the following parts:

- Damper strut
- Front and rear springs
- Torsion bars

The slightly taughter arrangement of spring suspension and damping resulted in further improved driving stability in view of the high driving performance and increased weight. Level control on the rear axle is standard. Sports chassis and sportline are not available for this model.

Damper strut, front axle

The damper strut is equipped with a tension stop spring (11m) additionally supporting the vehicle during cornering. The stop buffer arranged between damper strut and rubber mount is a harder design. The figure "9" is provided on the damper strut in yellow as color coding.

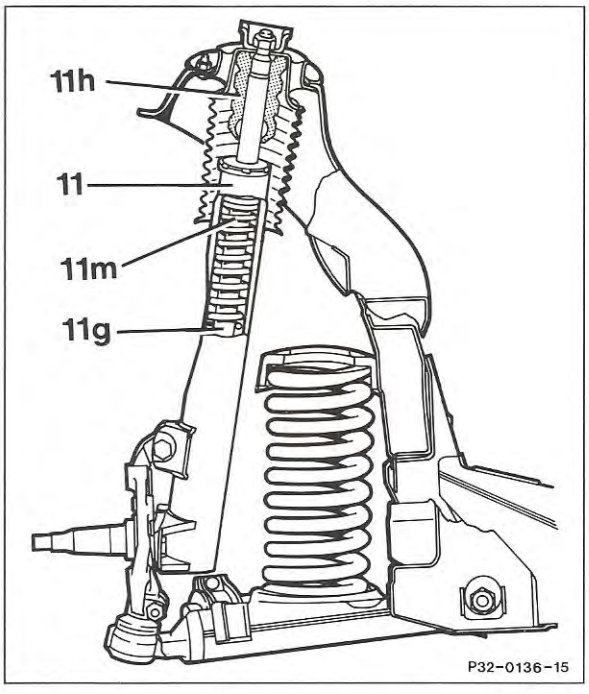

11 Damper strut
11g Piston rod
11h Stop buffer
11m Tension stop spring

courtesy of 500Eboard.com

Level control

The oil tank (2) is located in the engine compartment front on the right-hand side.

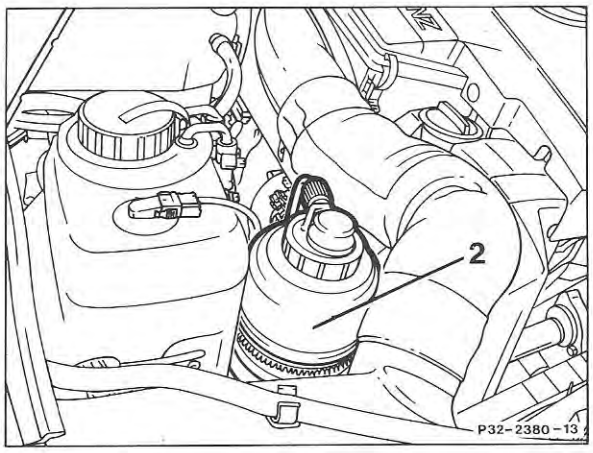

The connecting rod (7) is secured in the outer bore of the lever (3a) of the level control unit (3).

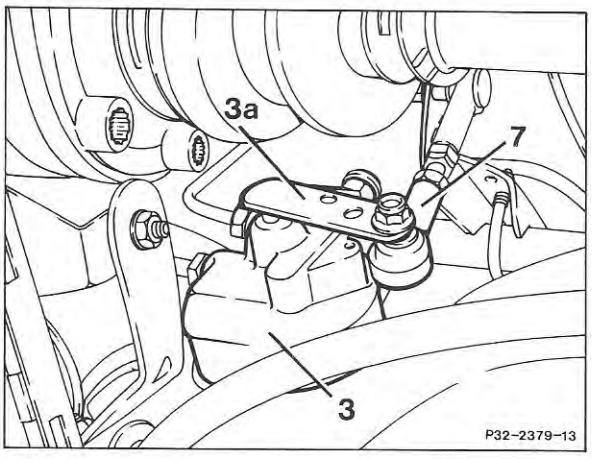

Spring strut, rear axle

The spring strut on the rear axle is equipped with a tension stop spring like the damper strut on the front axle. The spring strut is color-coded in white with the figure "9".

Torsion bar stabilizer

The torsion bar on the front axle has a diameter of 28 mm, the one at the rear axle of 18 mm.

Allocation spring-rubber mounts

The allocation of spring-rubber mounts should be taken from the parts microfilm.

courtesy of 500Eboard.com

Front axle

General

Except for the steering knuckle arm, the front axle was taken over from model 129.
The track (SV) of the front axle changed by 37 mm to 1534 mm as a result.

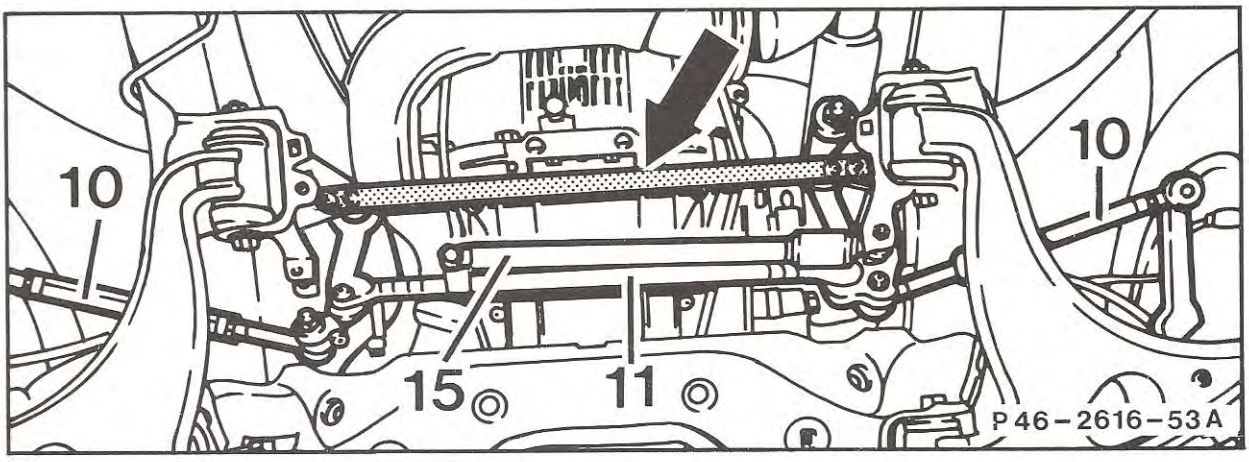

The rear control arm mountings are interconnected with a strut (arrow) to stabilize the vehicle during brake application.

courtesy of 500Eboard.com

Rear axle

Deviations on wheel guide

- Rear axle support reinforced.
- Rear center piece suspension.
- 4-arm joint flange on drive pinion with 110 mm pitch circle dia.
- Rear axle shafts with 32 mm dia. and larger inner ring joint.
- Rear axle shaft flange on rim centering lengthened by approx. 2 mm.
- Camber strut with closing panel in the area of the open box section.
- Track widened by 38 mm.

Rear axle support

The rear axle support was reinforced for the high engine torque and adapted to the frame floor. The front and rear transverse bridge and the flexible center piece suspension were changed.

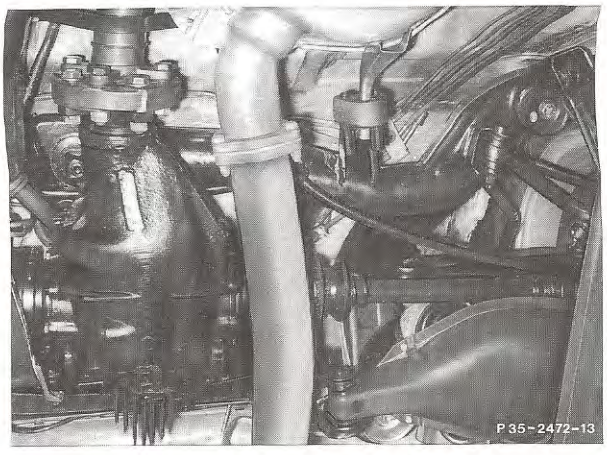

courtesy of 500Eboard.com

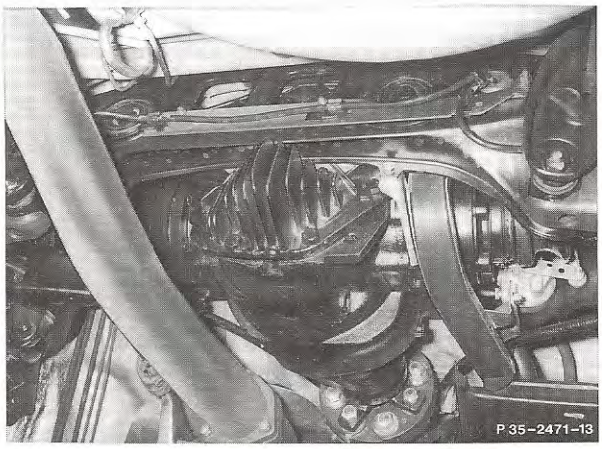

Gear set and rear axle shaft

Transmission version		automatic
Rear axle center piece	Ring gear dia.	210
	Transmission ratio	2,82
	Number of teeth	48:17
Gear/rotor on drive pinion for ABS	Number of teeth	– [1])
Joint flange dia.		110
Joint flange version		4-arm
Rear axle shaft with ring joint	Ball dia. inside	23.812
	Ball dia. outside	22.225
	Inner pitch circle dia.	102
	Shaft dia.	32
	Grease charge inside MB low-viscosity grease in g	150
	Grease charge outside MB low-viscosity grease in g	120

[1]) ASR as standard equipment, therefore no gear included.

courtesy of 500Eboard.com

Wheels, chassis alignment

Survey rims and tires

Model	Rim Version Designation Part no.	Summer tires tubeless		Winter tires tubeless	
		Designation	Make	Designation	Make
124.036	Light alloy 8-hole 8 J×16 H2 ET 34 124 401 14 02	225/55 ZR16	DUNLOP SP SPORT D40 MICHELIN MXM SPORT	225/55R16 95 H M+S	DUNLOP SP WINTER SPORT

Light-alloy rim

Cast 8-hole light-alloy rim 8 J x 16 H2 ET 34 without steel bushings.

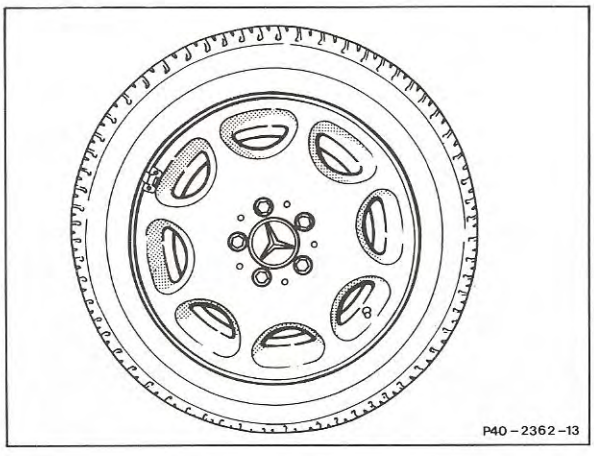

Steel plate rims

Steel plate rims 8 J x 16 H2 ET 35, part no. 129 400 02 02, are only approved for replacement in conjunction with winter tires.

courtesy of 500Eboard.com

Wheel bolt

Part no. 124 400 07 70 (A)
Bolt head height "K" = 43.5 mm.
Bolt shank length "L" = 40 mm with fitted collar.
Bolt head hollow and sealed with light alloy or steel cap.

Note

Wheel bolt part no. 126 400 00 70 (B) without fitted collar on bolt shank, known from models 126 and 129, must not be used.
Tightening torque 110 Nm.

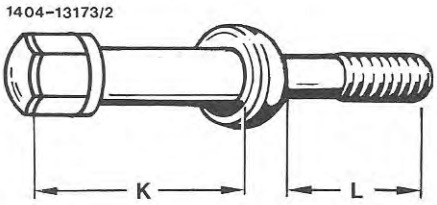

Wheel lock for light-alloy rim

Wheel locking bolts are installed as a standard. Two locking keys are located in the spare wheel trough.

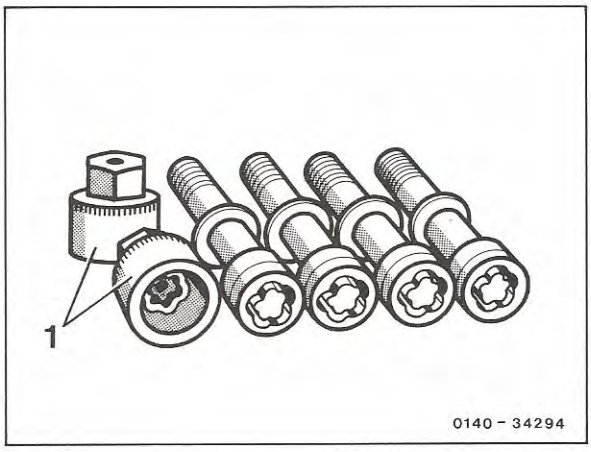

1 Locking key

Tire inflating pressure

Specified tire inflating pressure see table in tank flap.

Anti-skid chains

MB anti-skid chain with grip links, system RUD-Matic. Mercedes-Benz commercial goods part no. B6 7 58 0311, code no. 93. This is stamped into the closing hooks of the tension chain or on the buckle.

courtesy of 500Eboard.com

Chassis alignment (testing and adjusting values)

Vehicle level

Model	Front axle ready for driving mm	Rear axle with level control ready for driving [1] mm	 loaded (control point) mm
124.036	−9 $^{+10}_{-15}$	−10 $^{+10}_{-12}$	−27 ± 2 [2] −27 ± 10 [3]

1) Values ready for driving are based on basic pressure in spring struts.
2) Values for the adjustment.
3) Values for testing. The difference of vehicle level between adjustment and test is obtained from the idle travel of the level control unit, but which has no consequence on the control accuracy in driving operation.

Wheel adjustment on front axle ready for driving

Model			124.036
Camber [1]	Wheels in straight-ahead position (wheel toe value 0)		−1° $^{+10'}_{-20'}$ (−1.00° $^{+0.15°}_{-0.35°}$)
	Permissible difference between left and right		0°20' (0.35°)
Caster [1]	Wheels in straight-ahead position (wheel toe value 0)		10°50' ± 30' (10.85° ± 0.50°)
	via steering lock		10°35' ± 30' (10.60° ± 0.50°)
	Permissible difference between left and right		0°30' (0.50°)
Wheel toe [1] (wheels at front forced apart with 90–110 N)			0°20' ± 10' (0.35° ± 0.15°)
Track differential angle with 20° lock of curve inside wheel [2]			−0°55' ± 30' (−0.90° ± 0.50°)
Max. permissible steering lock on curve inside wheel [3]			40° (40.00°)
Ball point position [4]		Pitman arm	26.5 ± 2 mm
		Steering idler arm	23.5 ± 2 mm
Permissible vertical deviation of ball point position between pitman arm and steering idler arm			3 mm

1) Tolerances only for the test. When making adjustment, aim for set value.
2) Value stated without wheel toe.
3) A lock angle reduced by 7° to 11° is obtained on the curve outside wheel due to the track differential angle.
4) Correction on steering idler arm to the top and bottom by adding or removing a shim.

Note
Bracket values in decimal degrees.

courtesy of 500Eboard.com

Drive shaft

Model		124.036
Drive shaft tube dia.	front	60
	rear	
Joint flange pitch circle dia.		110/4-arm flange
Flange disk	front	torsionally rigid
	rear	
Centering sleeve	front	Solid rubber bearing bushing
	rear	Multi-material bearing bushing

courtesy of 500Eboard.com

Brakes

Front wheel brake

4-piston fixed caliper made of light alloy.
Piston dia.: 42/38 mm

⚠
Changed locking bolt for attachment of fixed caliper to steering knuckle.

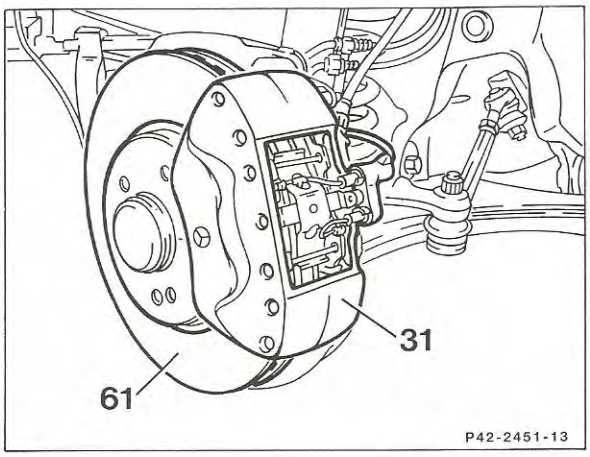

Tightening torques in Nm

Hex. head bolt for attachment of fixed caliper to steering knuckle	115 [1])
Union bolt of brake line or brake hose on brake caliper	9–13
Bleed screw on brake caliper	8–12

[1]) Tightening torque must **not** be exceeded.

Rear wheel brake

Fixed caliper with 38 mm piston dia. Inside-ventilated brake disk with 278 mm dia. and 24 mm thickness.

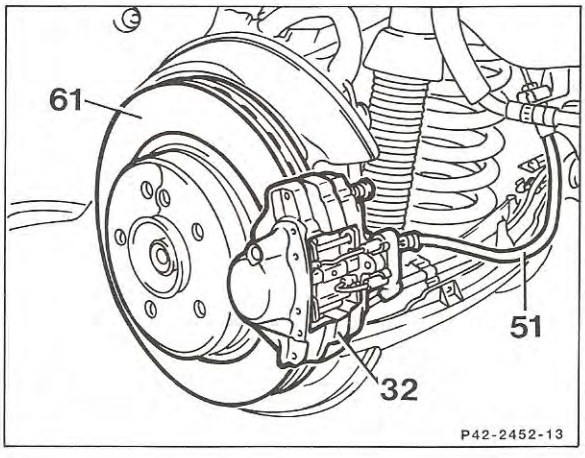

courtesy of 500Eboard.com

Brake pads, brake caliper, brake disk

Designation		Width mm	Thickness mm	Dia. mm	Version
Brake pads	front	99.75	17.5	–	–
	rear	61.75	15.5	–	–
Brake caliper piston	front	–	–	42/38	Light-alloy fixed caliper
	rear	–	–	38	Fixed caliper
Brake disk	front	–	28	300	inside ventilated
	rear	–	24	278	inside ventilated

Tandem brake master cylinder

Stepped tandem brake master cylinder, diameter for pressure rod circuit 1" and for floating circuit 3/4".

Brake booster

Double diaphragm brake booster 8/9".

Brake fluid

Renew brake fluid every two years.

courtesy of 500Eboard.com

Acceleration skid control (ASR III)
Basic equipment

The acceleration skid control (ASR II) known from model 129 was revised and is described as 3rd version (ASR III). The changes compared with the ASR II are described in the following.

All changes concerning the electronic accelerator are included in Group 30.

The control unit ABS/ASR (N30/1) was revised. It is now capable of diagnosis. Recognized faults are stored and can be read out with the impulse display via the diagnosis test coupling 38-pole (impulse signal, X11/4) and checked with the contact box. (ASR test, see Diagnosis Manual Chassis, register 5.2).

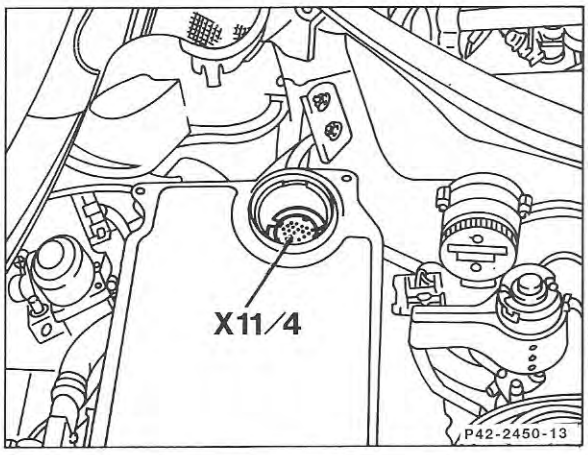

The voltage is supplied via the basic module (GM)/overvoltage protection (N16/1). The control units are installed in the module box.

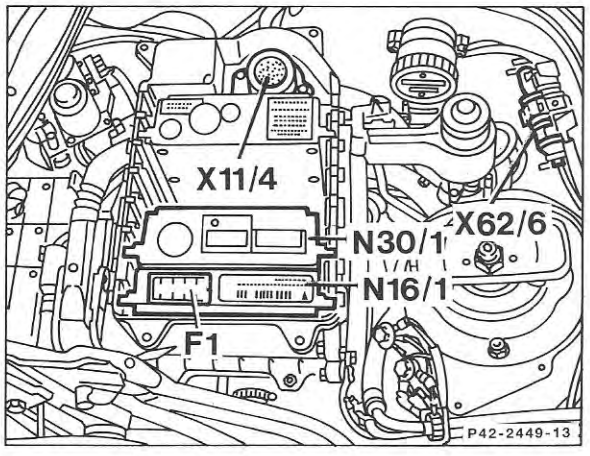

courtesy of 500Eboard.com

Steering

Steering gear

The steering gear 765.921 (LSL 068) corresponds to the version of model 129 except for the changed lower installation position. The steering lock was reduced owing to the wider tires, the turning circle is 11.7 m.
Transmission ratio i = 14.0–15.0

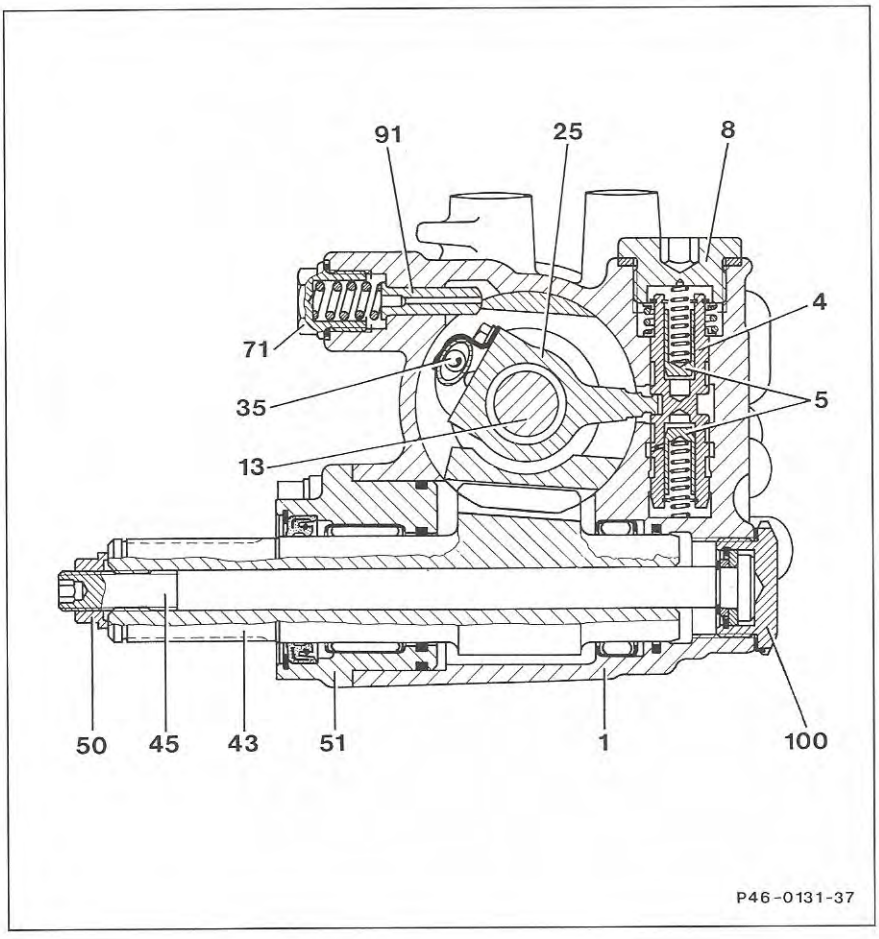

1	Steering housing
4	Control valve
5	Reaction plunger
8	Closing cover
13	Steering worm
25	Steering nut
35	Balls
43	Steering shaft
45	Adjusting screw
50	Poly stop nut
51	Housing cover with needle sleeve
71	Screw plug
91	Automatic play compensation
100	Screw plug

courtesy of 500Eboard.com

Jacket tube/Steering spindle

The jacket tube with electrical length adjustment is installed as standard. It is connected with the steering gear via a universal joint (2).

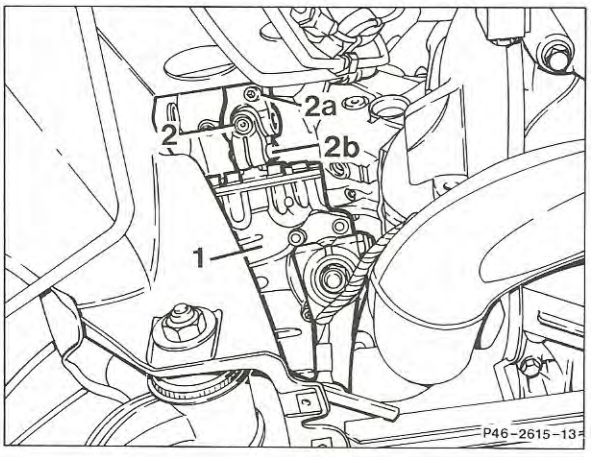

Steering wheel

A newly designed leather steering wheel with 390 mm dia. is installed as a standard feature.

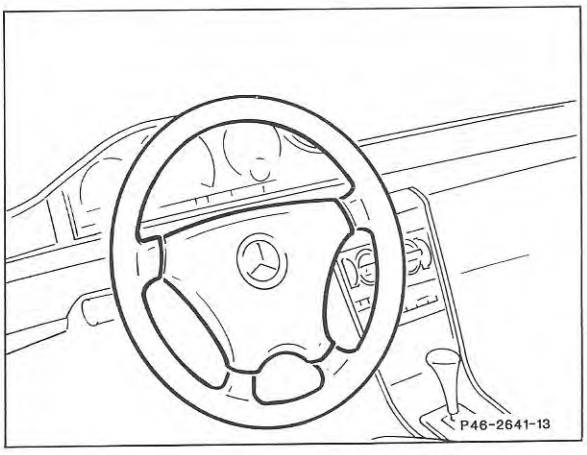

Steering geometry, steering linkage

The steering linkage was adapted to the increased front axle load. The left tie rod is equipped with a hexagon on the adjusting tube for space reasons.
The right tie rod was taken over from model 129.

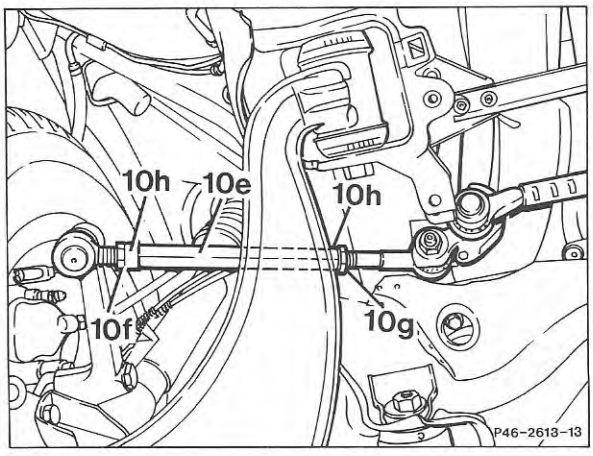

courtesy of 500Eboard.com

To protect the joints, a heat shield (12a) is mounted on the pitman arm.

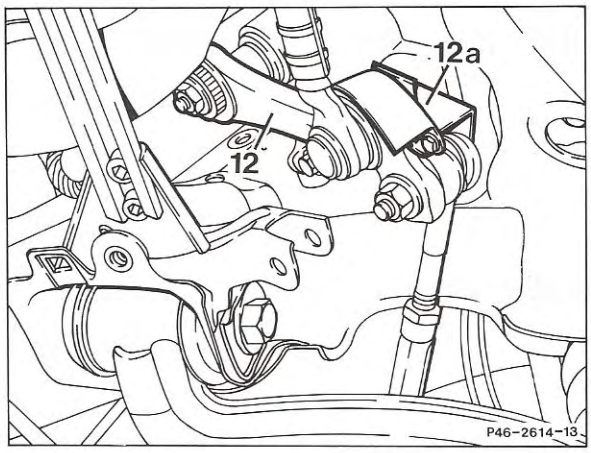

courtesy of 500Eboard.com

Fuel system

Fuel tank

Capacity approx. 90 liters, 11.5 liters of which are reserve.

Fuel evaporation system

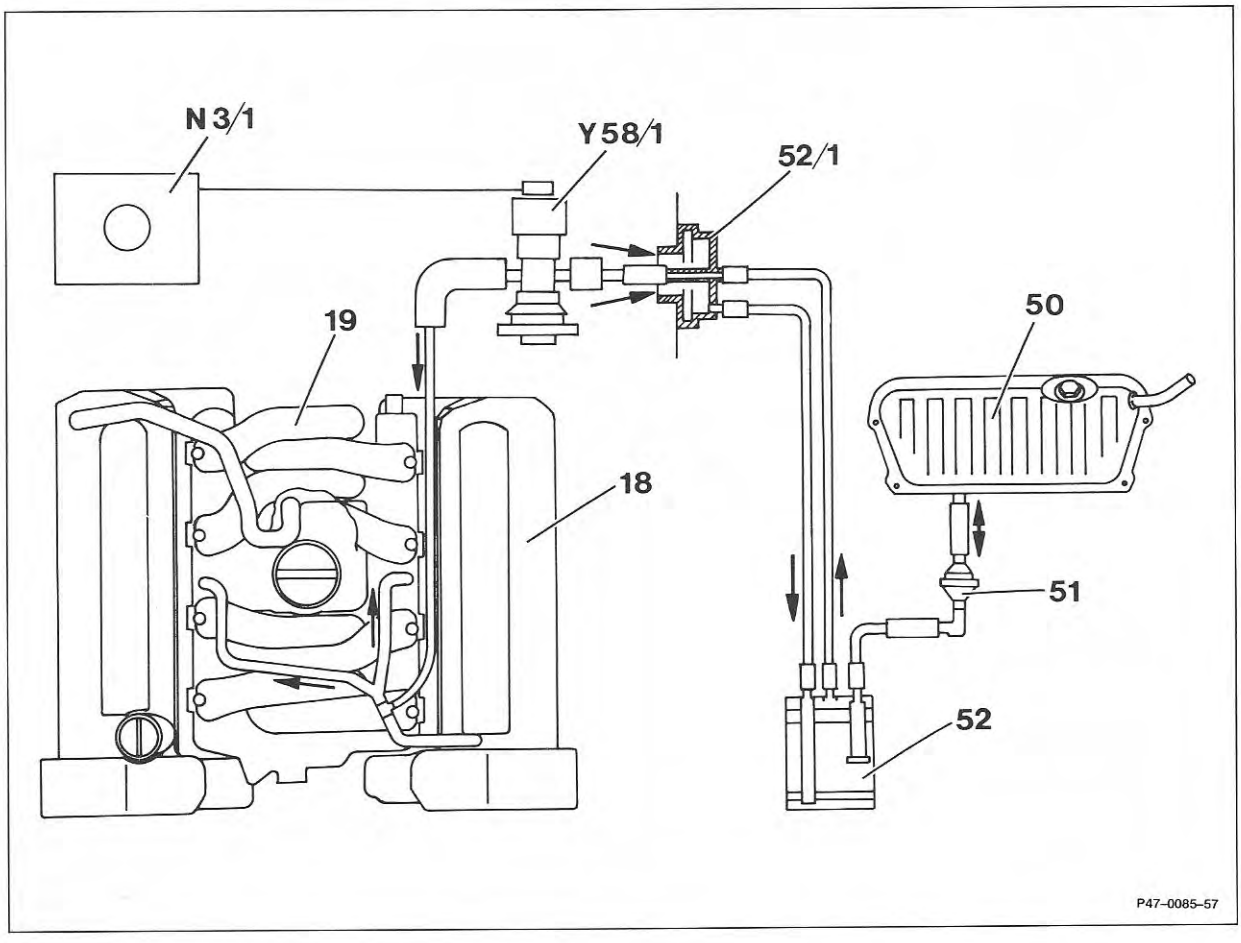

Function diagram fuel evaporation system

1	Intake manifold
2	Cylinder head, left
50	Fuel tank
51	Breather valve
52	Charcoal canister
52/1	Boot
N3/1	Control unit LH
Y58/1	Change-over valve regeneration (closed without current)

courtesy of 500Eboard.com

Regeneration takes place under the following conditions:

- Coolant temperature >70 °C.
- Intake air temperature >20 °C.
- Engine must have run for at least 2 minutes after starting.
- Engine not in coasting operation.

Function description and assembly operations see Repair instructions Engine 119, Combustion LH injection.

courtesy of 500Eboard.com

Exhaust system

The volume of the two catalytic converters is 5.8 liters. In order that the catalytic converters reach their reaction temperature faster, the front pipe system has been completely insulated. The monoliths are held with swell mats. These serve for insulation at the same time. The center muffler is identical to that of model 129, the rear muffler is new. A flange connection between center and rear muffler permits the individual replacement of both mufflers. Removal, reinstallation of exhaust system, see Repair instructions Engine 119 Combustion LH injection.

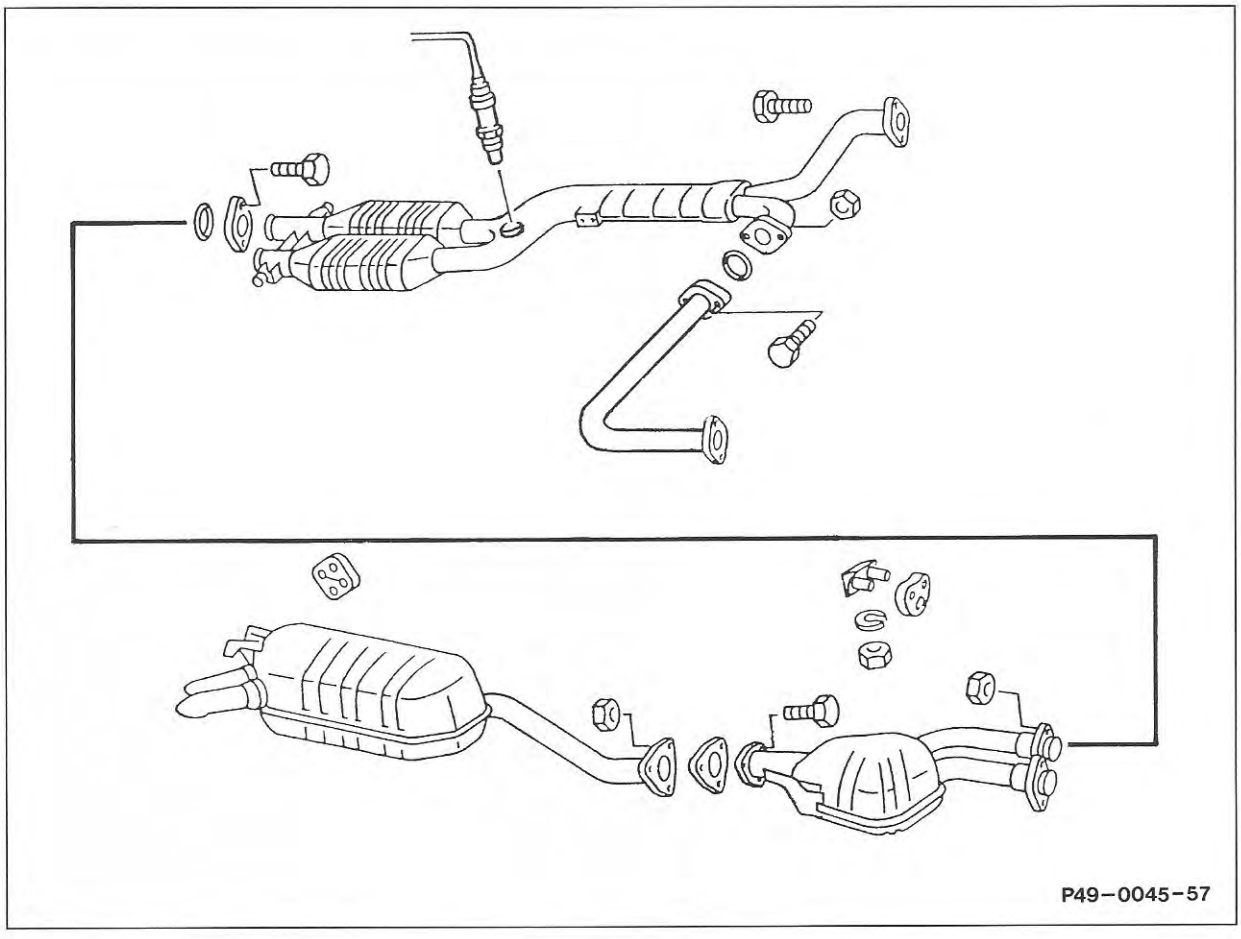

courtesy of 500Eboard.com

Electrical system, equipment and instruments

Battery

Battery 12 V 92 Ah, no maintenance is required.

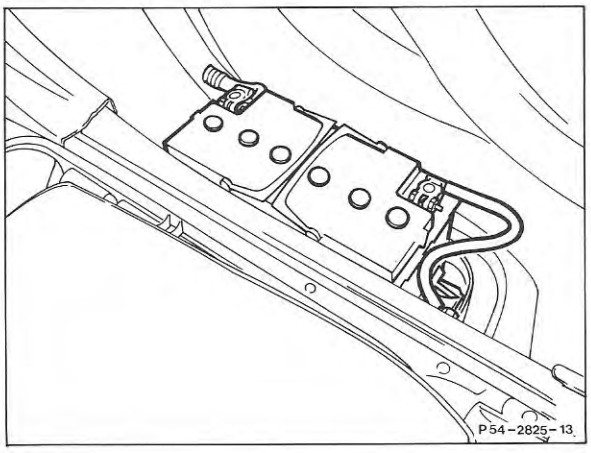

Arrangement of battery in trunk right

Note
The battery should be tested according to the repair instructions Group 54.

Battery positive leads
There are two positive battery leads with a cross section of 70 mm^2 and 10 mm^2.

Positive battery lead (70 mm^2)
The 70 mm^2 positive battery lead serves to supply all electric users with voltage, except the control units in the module box.

Positive battery lead (10 mm^2)
The 10 mm^2 positive battery lead serves to supply the control units in the module box. This positive lead has no connection to the alternator, only to the battery.

courtesy of 500Eboard.com

Installing the 70 mm² and 10 mm² positive battery leads

The 70 mm² positive battery lead is directly installed from the battery to the terminal block (X4/10) and the 10 mm² positive lead from the battery to the module box.

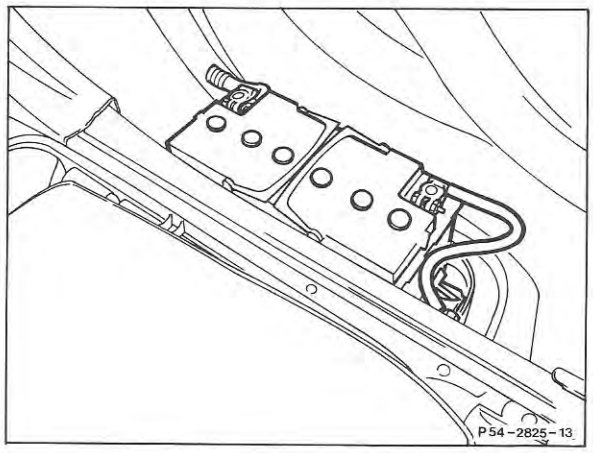

1 70 mm² positive battery lead
2 10 mm² positive battery lead

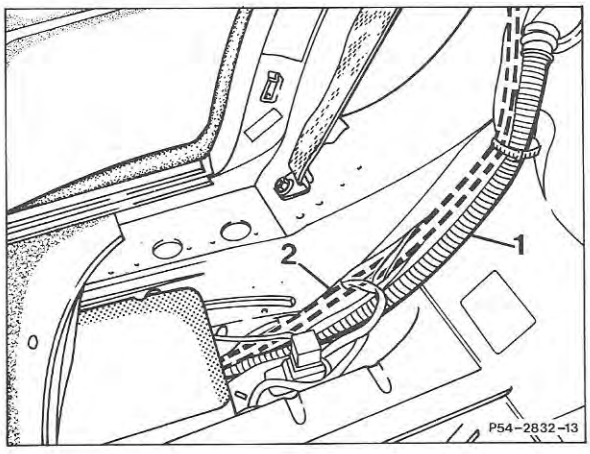

1 70 mm² positive battery lead
2 10 mm² positive battery lead

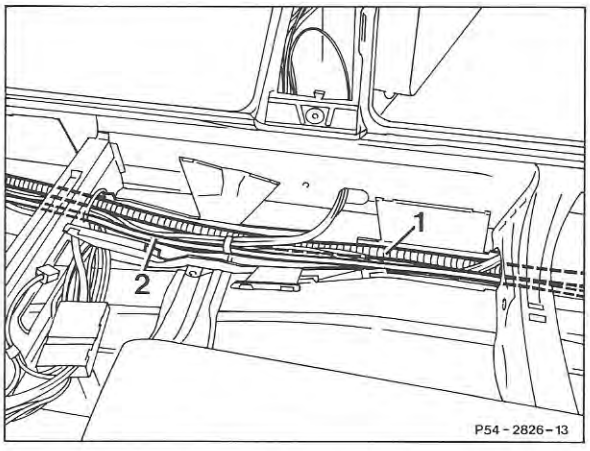

1 70 mm² positive battery lead
2 10 mm² positive battery lead

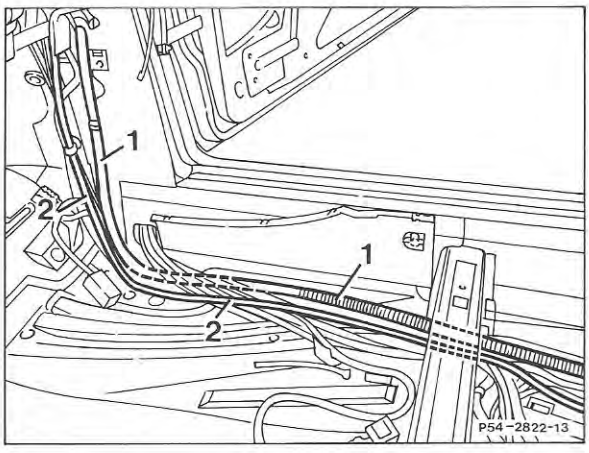

1 70 mm² positive battery lead
2 10 mm² positive battery lead

courtesy of 500Eboard.com

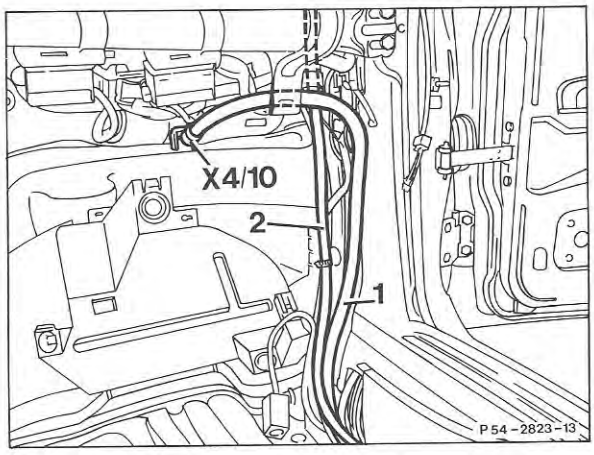

X4/10 Terminal block
terminal 30/30Ü/61
1 70 mm² positive battery lead
2 10 mm² positive battery lead

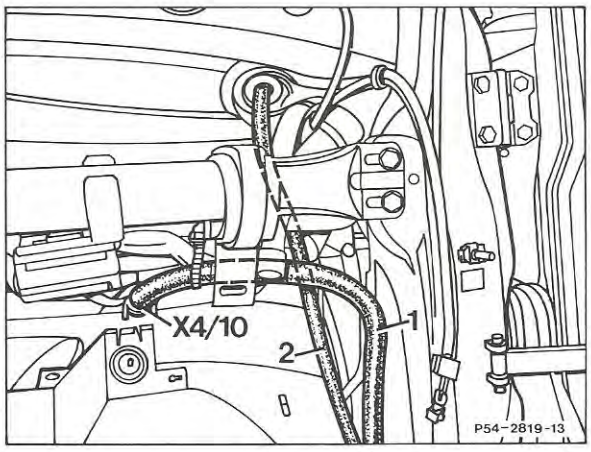

X4/10 Terminal block
terminal 30/30Ü/61
1 70 mm² positive battery lead
2 10 mm² positive battery lead

Terminal block (X4/10)
The alternator, the starter motor and the interference suppression capacitor are connected to the 70 mm² positive battery lead connection.

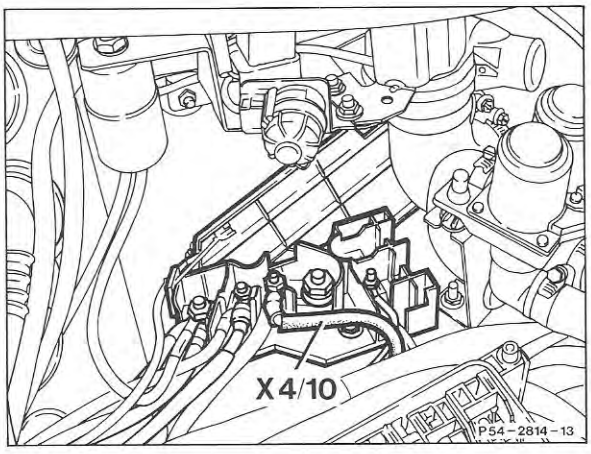

Arrangement unit compartment right
X4/10 Terminal block
terminal 30/30Ü/61

Interference suppression capacitor (C2)
The interference suppression capacitor (C2) Elko 4700 µF is installed for interference suppression of the 70 mm² positive battery lead.

It is connected with positive (+) to the terminal block (X4/10) (connection 70 mm² positive battery lead) and with negative (–) to the grounding point W.

courtesy of 500Eboard.com

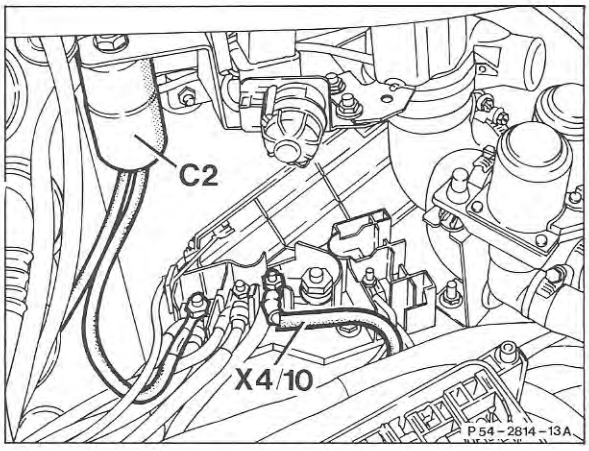

1 70 mm^2 positive battery lead
C2 Elko interference suppression alternator/ battery lead
W16/2 Ground unit compartment (Elko, interference suppression alternator/battery lead)
X4/10 Terminal block terminal 30/30Ü/61e/87L

Module box (F23)

In order to ensure protected and compact accommodation of the control units in the engine/-unit compartment, these are housed in the module box (F23).

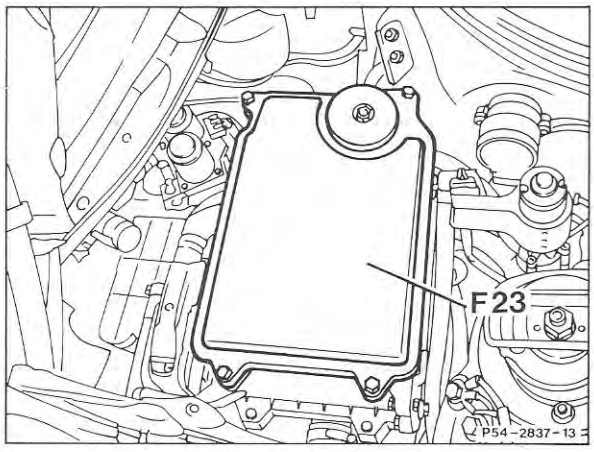

F23 Module box

The control units in the module box (F23) are cooled by a blower (M2/2). The cooling air is drawn from the interior in the area of the glove compartment and again discharged into the interior.

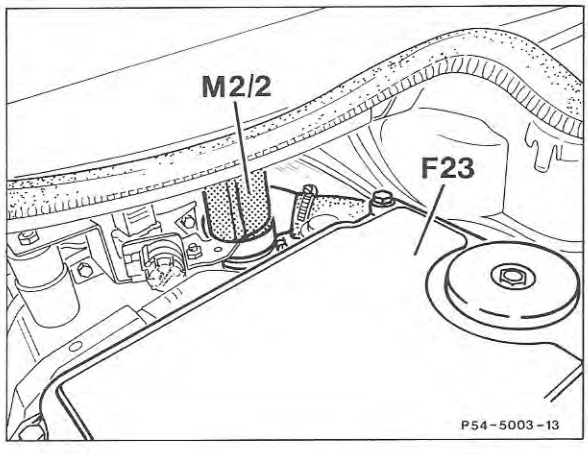

M2/2 Blower motor
Module box

courtesy of 500Eboard.com

The blower (M2/2) is switched on and off by the temperature sensor incorporated in the basic module (N16/1).

The blower (M2/2) is switched on:

- For 1.5 seconds after each starting process when the engine speed exceeds 1200 rpm.
- At a temperature in the module box of ≥ +60 °C.

The blower (M2/2) is switched off at a temperature of ≤ +55 °C.

If a limit temperature is exceeded in operation despite blower operation (M2/2), this will be stored as fault 5 during the diagnosis of the basic module (N16/1) (see Diagnosis Manual).

Arrangement of control units in the module box (F23)

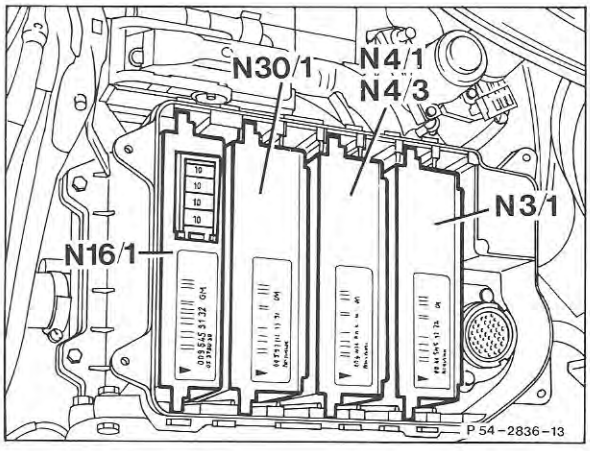

N3/1 Hot wire air control unit (LH)
N4/1 Control unit electronic accelerator (EFP)
N4/3 Control unit cruise control (TPM) idle speed control
N16/1 Basic module (GM)/overvoltage protection
N30/1 Control unit ABS/ASR

All control units and couplings in the module box include a positive plugging feature. The control units are additionally color-coded (arrow) which is identical with the colors of the coupling housings.

Some control units have two multi-point connectors, while the coupling for the second multi-point connector is of a darker shade of color like the mark on the control unit.

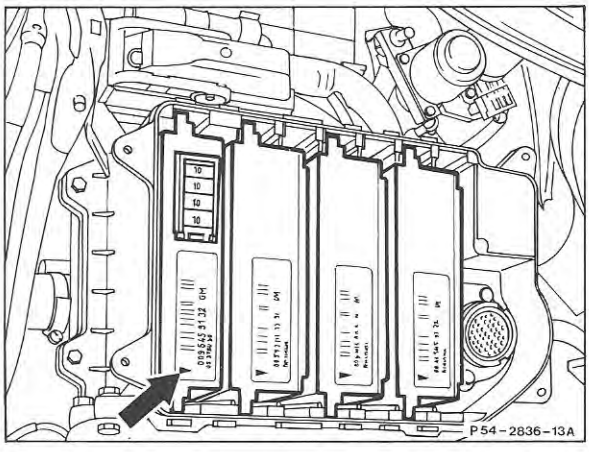

courtesy of 500Eboard.com

The individual coupling fields of the module box are numbered to facilitate matching the respective control unit to the coupling field and the coupling of the respective cable harness

Allocation of control units

Control unit with color coding	Code number on coupling field	Color coding of coupling on cable harness
N3/1 Hot wire air control unit (LH) **light green**	6 7	light green dark green
N4/1 Control unit electronic accelerator (EFP) **light orange**	4 5	light orange dark orange
N16/1 Basic module (GM)/overvoltage protection **black**	1	black
N30/1 Control unit ABS/ASR **light grey**	2 3	light grey dark grey

Removal, reinstallation of control units

Note
A special tool with the part no. 140 589 01 33 00 is required to install and remove the control units in the module box.

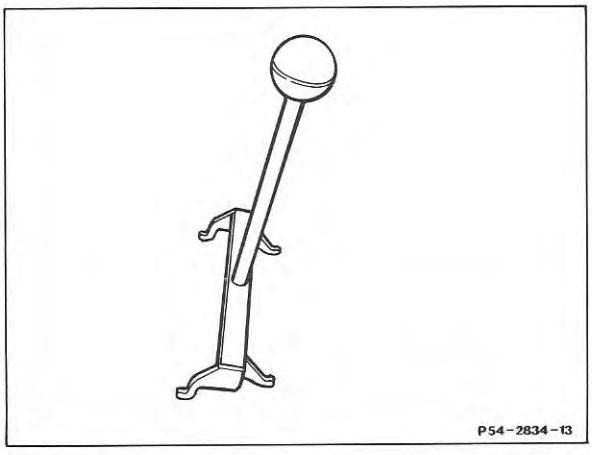

Special tool

courtesy of 500Eboard.com

1 Disconnect ground lead from battery.

2 Unscrew screws from module box lid and remove lid.

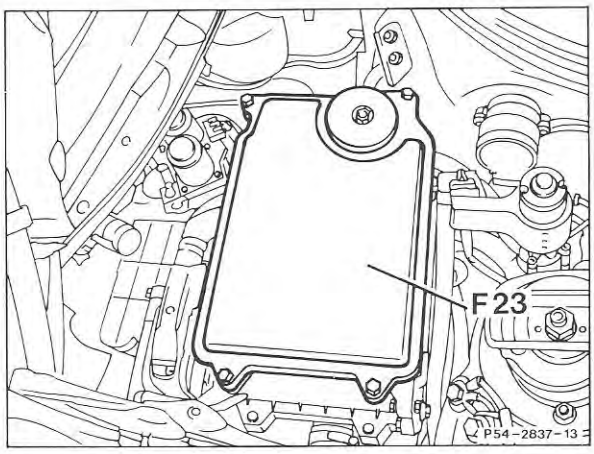

3 Start special tool on control unit (arrows) and move in the direction of the arrows until no resistance is felt.

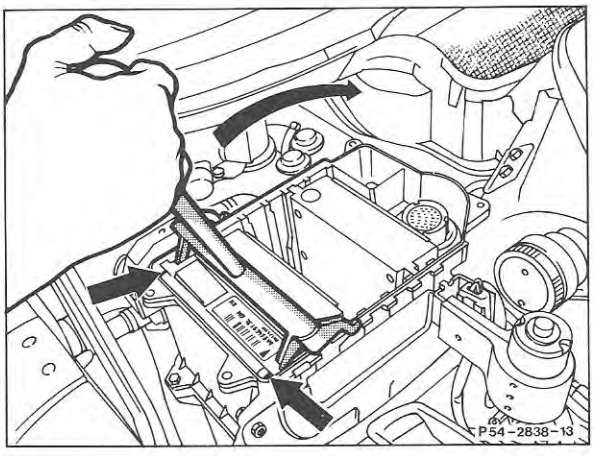

4 Remove special tool and pull out control unit.

Installation

5 Push control unit in by hand while observing the color marks.

6 If applicable, completely push in control unit with the special tool. For this purpose the special tool should be started on the frame of the module box below the ribs (arrow). Move special tool in direction of arrow until resistance is felt.

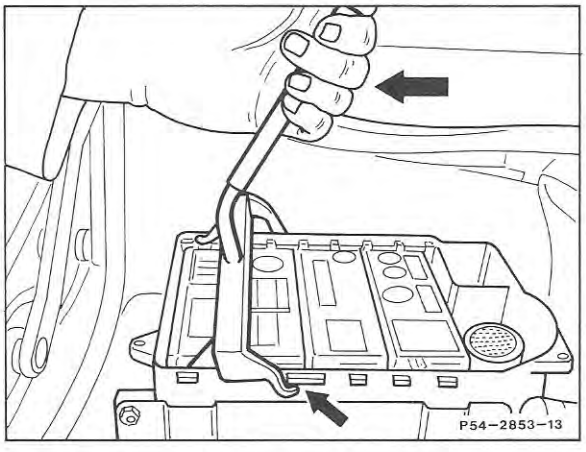

7 Remove special tool.

8 Further assembly should be carried out in reverse order.

courtesy of 500Eboard.com

Test coupling for diagnosis 38-pole (X11/4)

This is integrated in the module box and accessible after removing a cover (arrow). The diagnosis of the individual systems is described in the diagnosis manuals.

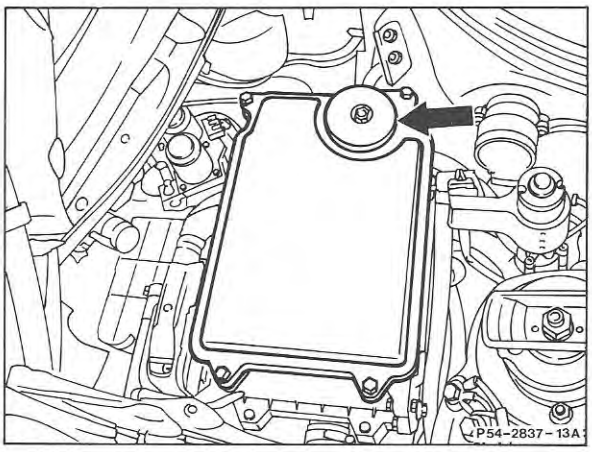

Assignment of 38-pole test coupling (X11/4)

1 Terminal 31 (ground) W12, W15a (electronic ground)
2 Reference voltage terminal 87 ($I_{max} \leq 10$ mA) or 15z, if rear module box is available
3 Terminal 30
4 LH *
5 Vacant
6 ABS/ASR or ABS *
7 E-accelerator/cruise control or cruise control *
8 Basic module *
9 Vacant
10 Vacant
11 Vacant
12 Vacant
13 Vacant
14 Vacant
15 Vacant
16 Automatic temperature control/automatic climate control **
17 EZL *
18 Vacant
19 Vacant
20 Vacant
21 Vacant
22 Vacant
23 Vacant
24 Vacant
25 Vacant
26 Vacant
27 Vacant
28 Vacant
29 Vacant
30 Airbag with belt tensioner **

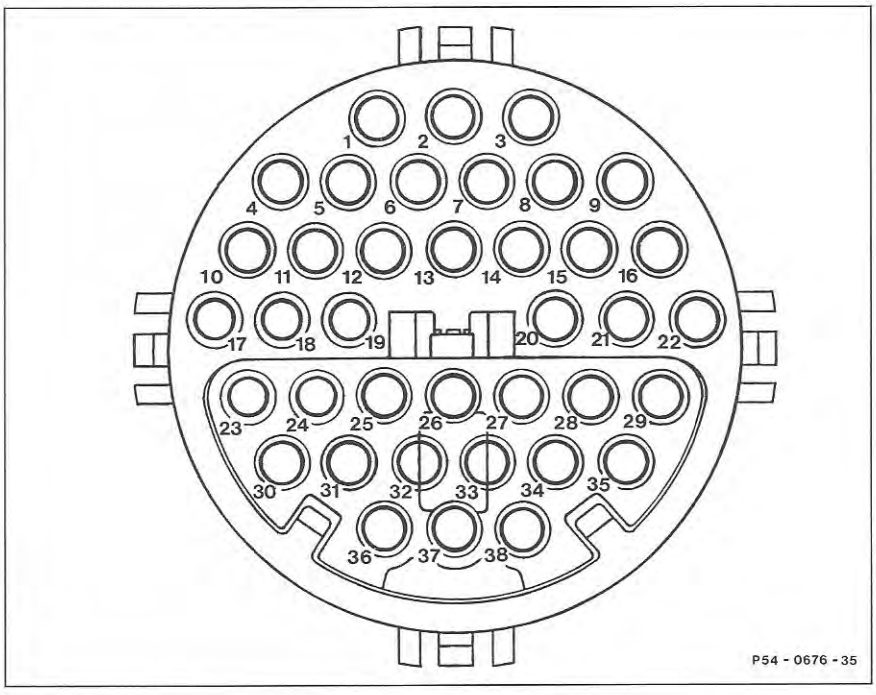

31 Vacant
32 Vacant
33 Vacant
34 Vacant
35 Vacant
36 Vacant
37 Vacant
38 Vacant

* Can be diagnosed via serial interface
** only flash code

courtesy of 500Eboard.com

Instrument cluster

Electronic speedometer
The speed signal for the speedometer is taken from the inductive sensor (L2) on the transmission.

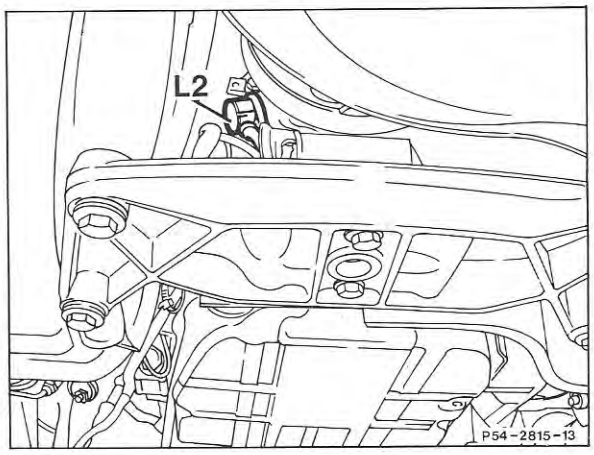

Fuel gauge
Fuel gauge and fuel sensor were adapted to the larger fuel tank (90 liters) and the greater fuel reserve (approx. 12 liters).

Test values on fuel sensor:
In installation position
Reserve indication, float below
0–8.1 Ω

Sensor turned by 180°
Indication full, float up
79–82 Ω

Two-tone fanfare

The standard installation of the two-tone fanfare does away with the signal horns and the change-over switch signal system/fanfare.

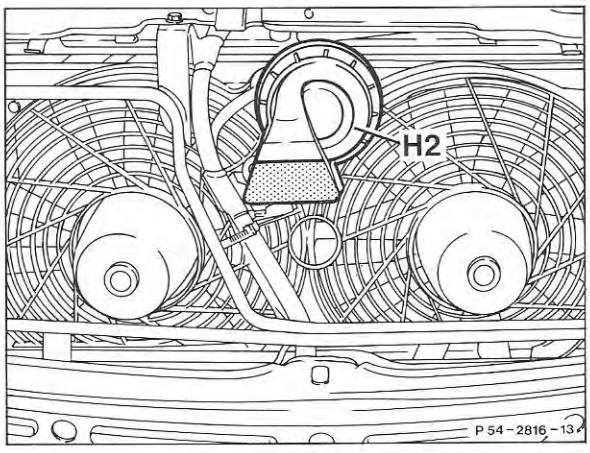

H2 Fanfare 1

courtesy of 500Eboard.com

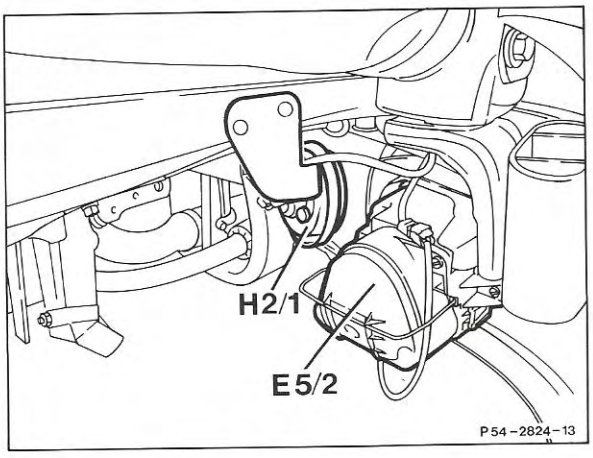

E5/2 Fog lamp right
H2/1 Fanfare 2

courtesy of 500Eboard.com

Body

Body in white

Owing to the installation of a V8 engine with the corresponding exhaust system and the wider track, the following areas of the body in white were changed:

- Front end
- Wheelhouse front and rear
- Bulkhead
- Tunnel
- Main floor
- Rear floor
- Various members, reinforcements and consoles

Front and rear wings were made wider in the area of the wheel arch.

Accident repair using straightening angle sets

The Celette and Car-Bench sets of straightening angles approved for model 124 are also valid for model 124.036.
Before placing the complete vehicle on the straightening bench, drag coefficient covering for the engine compartment must be removed. Then loosen the wheel arch trim in the front area and fold aside so that no interference point to the straightening bracket for side member locating recess is created.
The mounting with control pin for lining up the vehicle according to reference bore "K" is screwed into the left grid field 1 of the transverse beam via hole pattern "2".
When placing the vehicle on the set of straightening brackets, the straightening angle for the steering idler arm to the exhaust should be inspected for interference points, if required the straightening angle should be suitably modified at the point of interference.

courtesy of 500Eboard.com

Panes and windows

Heat absorbing glass all round and back window in laminated glass are basic equipment.

Interior trim

The interior trim is available in the colors black, blue, brazil, cream beige and grey.

Wood moulding strips
All wood moulding strips are made of walnut root as standard feature.

Doors

Power windows on 4 windows with comfort closure are standard.

courtesy of 500Eboard.com

Electrical system body

Radio

Radio "Becker Mexico 2000" with front and rear loudspeakers and automatic antenna are installed as standard.

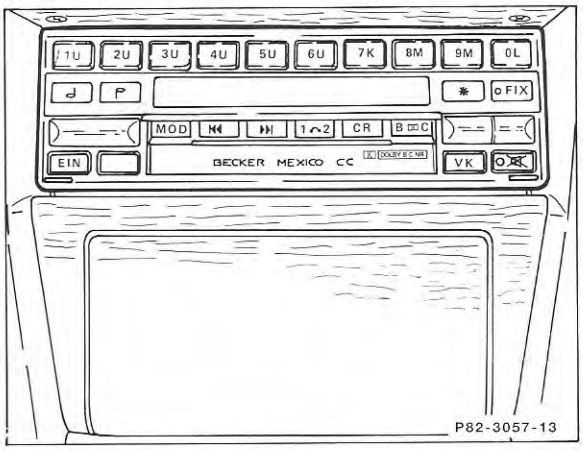

The radio "Becker Mexico 2000" consists of the following components:

- Radio control unit (A2/4)
- Receiver and amplifier (A2/3) in trunk

A CD changer (Becker Silverstone) is available as special equipment.
This CD changer is matched to the radio. For this reason, only the CD changer available as special equipment can be used for subsequent installation.

Arrangement of components:

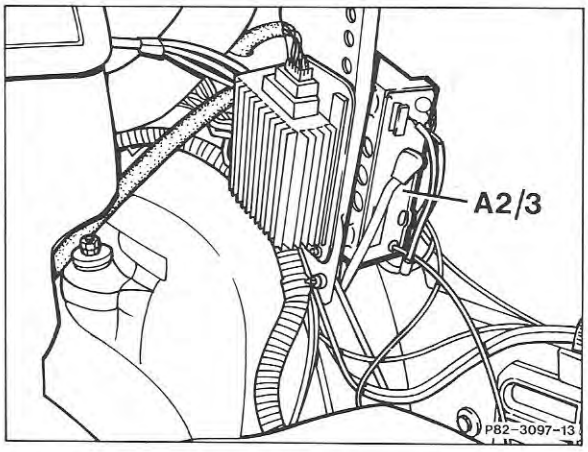

A2/3 Receiver and amplifier (in trunk)

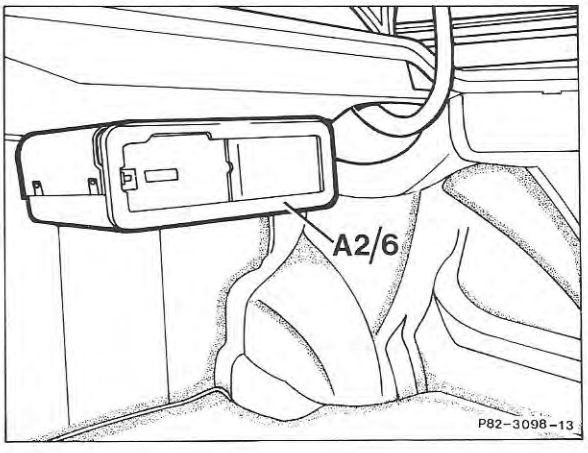

A2/6 CD player with changer in trunk

courtesy of 500Eboard.com

Lighting

Instead of the fog lamp inserts, long-range headlamp inserts are installed in the headlamp units left and right (E1 and E2).

The main headlamps are equipped with H4 bulbs as before, the long-range headlamps with H3 bulbs.

The ellipsoid fog lamps are installed in the front spoiler below the bumper.

The function of the ellipsoid fog lamp corresponds to the known projection principle where the light no longer passes through a scattering lens, but through a focussing lens. The advantage is a more compact construction and extremely sharp bright-dark border. This ensures a wide-spread light distribution and reduced glare.

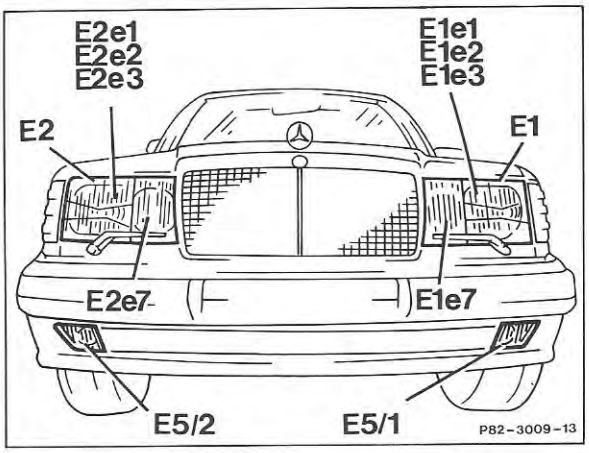

E1	Headlamp unit left
E1e1	High beam
E1e2	Low beam
E1e3	Parking lamp
E1e7	Long-range headlamp
E2	Headlamp unit right
E2e1	High beam
E2e2	Low beam
E2e3	Parking lamp
E2e7	Long-range headlamp
E5/1	Fog lamp left
E5/2	Fog lamp right

Repair instructions

For adjusting the headlamp unit left (E1) or right (E2) or replacing a bulb it is necessary to remove the air intake housing for the engine (arrow).

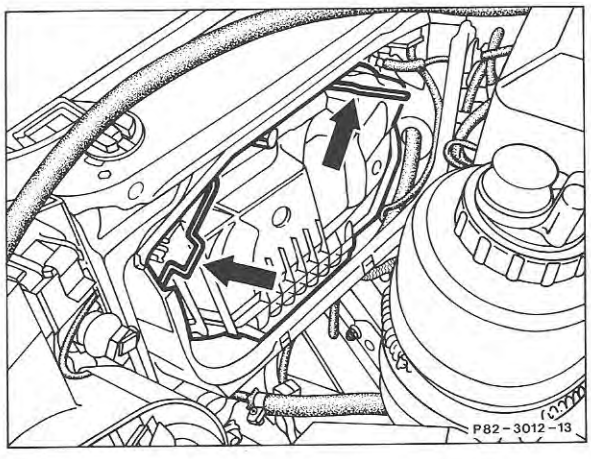

courtesy of 500Eboard.com

Removal and reinstallation of air intake housing for engine

- Pull hose to air cleaner off air intake housing.
  At the same time remove coupling from suction air temperature sensor on left air intake housing.

- Lift struts on air intake housing and guide over both retaining lugs (arrows) while pulling the air intake housing upwards and out.
- Installation should be carried out in reverse order.

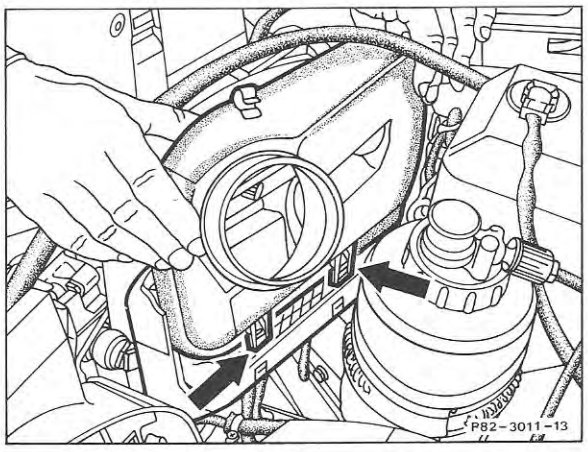

Windshield washer system

The stroke of the single-arm wiper was increased by 4 mm in the extreme outer position.

Interior lighting

Exit lamps in the doors, sun visors with lighted mirror and reading lamps in the rear are part of the basic equipment.

courtesy of 500Eboard.com

Air conditioning

Air conditioning - automatic temperature control

The basic equipment includes an air conditioner.
The automatic climate control is available as special equipment.

Emergency equipment

Fire extinguisher

The fire extinguisher is installed as a standard feature.

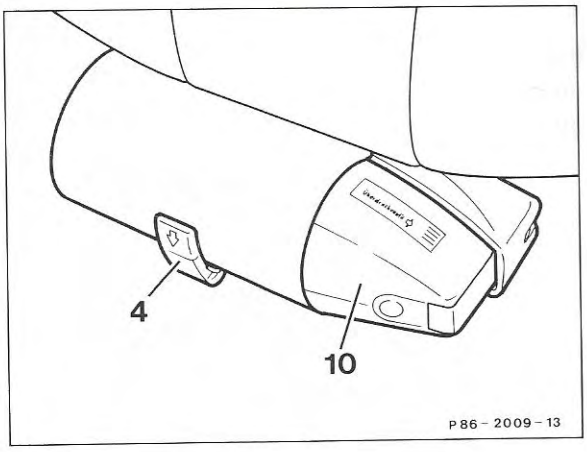

4 Bracket closure
10 Fire extinguisher

courtesy of 500Eboard.com

Attachments

Bumper

The changed shape, more steeply positioned front bumper panel reduces the lift on the front axle by almost half. The fog lamps are arranged on the left and right next to the changed ventilation slits similar to model 129.

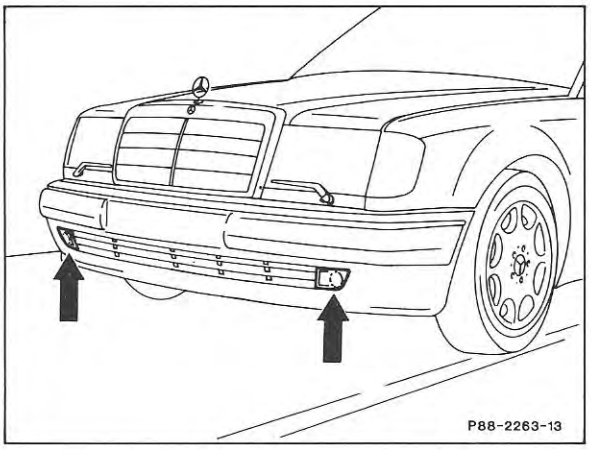

The rear bumper panel was adapted to the laterally changed rear wings.

The function of the front and rear bumpers equipped with energy-absorbing foam pieces supported by bending struts on the body structure remain unchanged.

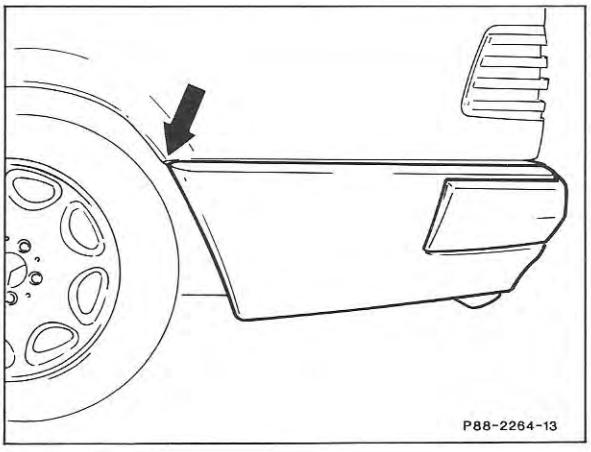

Front wing

The front wings were arched outward in the area of the wheelhouses in order to cover the wider tires.

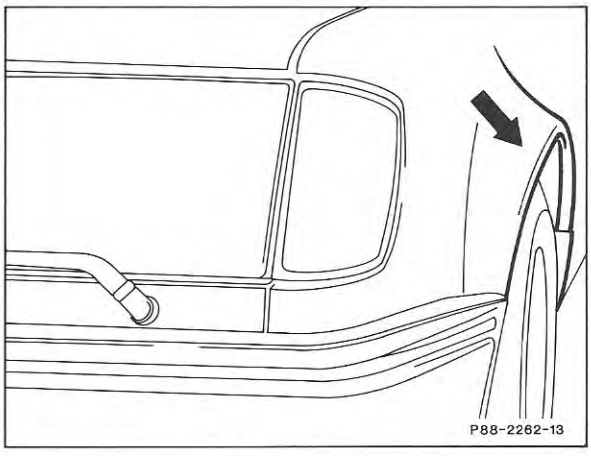

courtesy of 500Eboard.com

Side cover panels

The side cover panels of front and rear wings and those of side members are adapted to the changed contours of the front and rear wings.

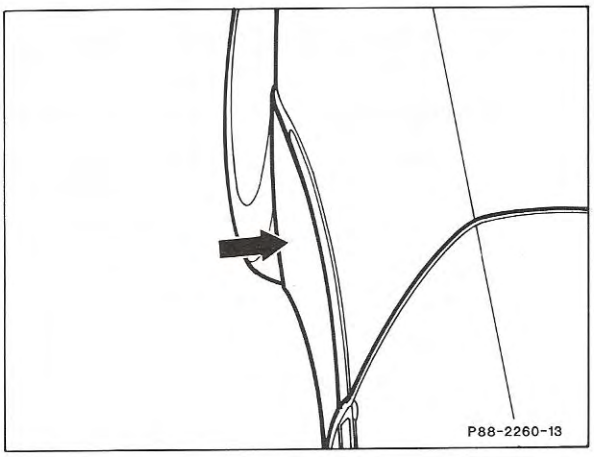

Trunk

Because of the larger fuel tank the trunk volume is 485 liters instead of 520 liters on vehicles with 70-liter fuel tank.

courtesy of 500Eboard.com

Seats, restraint systems

Seats

The known sports seats are standard equipment at the front and rear. The front seats are electrically adjustable as standard. In the basic version the seats are covered with fabric. A leather version is available as special equipment. The colors black, blue, brazil, cream beige and grey are available for both variants. Because of the individual seats in the rear the 500 E is only registered as a four-seater car.

Head restraints

Two head restraints in the rear are part of the standard equipment.

courtesy of 500Eboard.com

Paintwork

The coating system such as
- corrosion protection
- painting process
- paint structure

is identical to that of other models of Sindelfingen production. Repair painting of the outer skin and plastic parts is carried out as before.

Range of colors

The vehicles are available only in the 14 metallic colors with the permanently allocated nine contrast colors for the plastic attachments (bumper and lateral cover panels) (allocation see following table).

Plastic attachments

Change compared with model 124:
The bumper cover panel was changed to the "PUR-GF" (polyurethane glass fibre-reinforced) material of higher quality.

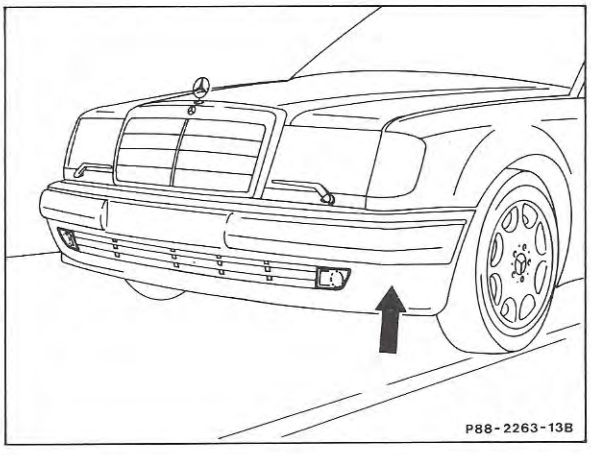

courtesy of 500Eboard.com

Light-alloy rims

The new light-alloy rims (8-hole design) are painted with the two-layer painting process as before. Repair painting is carried out as before (see microfilm Group 98, operation No. 650).

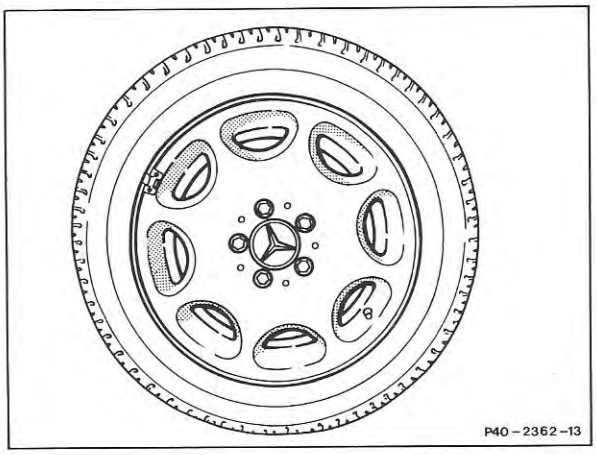

Allocation of contrast colors for the plastic attachments to the outer skin metallic paint finish

Paint finish	Attachments	Paint finish	Outer skin
No. of color	Name of color	No. of color	Name of color
3521	navarra red	3512 3587	almandin red pajett red
5301	andor blue	5348 5929	pearl blue nautic blue
6856 [1) 3)]	tropical green	6249 6256 [1) 2)]	malachite crystal green
7176	mussel grey	7172 9702	anthracite grey smoke silver
7181 [1) 3)]	atlas grey	9744 [1) 2)]	brillant silver
7700	alto grey	7122 9199	mother-of-pearl grey blue black
7166	purple grey	8481	bornit
8477	chinchilla	8441	impala
6250	lago	6888	beryll

1) New as of 01/91.
2) Repair painting with metallic basic paint 000 986 55 37 or 000 986 56 37 and 2-component top coat paint clear, glossy 001 986 38 37 or 000 986 48 37.
3) Repair painting with KS basic paint 002 986 04 37 and KS 2-component top coat paint colorless, silk gloss elastic 002 986 27 37.

courtesy of 500Eboard.com

In the Federal Republic of Germany the special tools marked with * are sent to the subsidiaries and large agents and invoiced without order.

In export countries comparable arrangements were made with various distributors and general agents.

Part no. Designation	Group	Set	Supply plant	
140 589 02 63 00 * **Contact module** Gasoline injection system LH ABS/ASR Electronic accelerator	07, 35, 42, 54	B	–	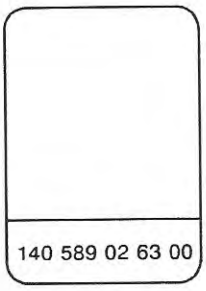
140 589 01 63 00 * **Contact module** Basic module/overvoltage protection	54	B	–	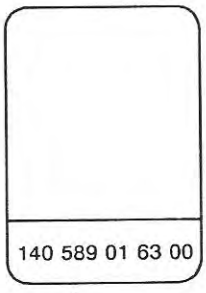
140 589 10 63 00 * **Test cable 18-pole** Electronic ignition system EZL/AKR	15	B	–	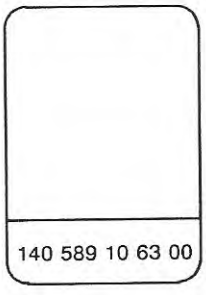
140 589 06 63 00 * **Contact box** All modules	54	B	–	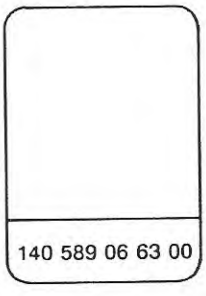

courtesy of 500Eboard.com

Part no. Designation	Group	Set	Supply plant	
129 589 00 21 00 **Contact box 126-pole** for testing electronic systems in conjunction with contact modules	54	B	06	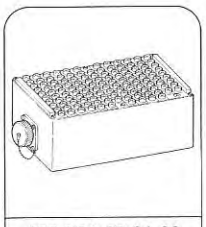 129 589 00 21 00 **54**
119 589 04 63 00 * **Pressure hose with angle connection fitting 7/16"-20 UNF** and union nut M12 x 1.5 mm for LH gasoline injection system (for tester 103 589 00 21 00)	07	B	–	119 589 04 63 00
119 589 01 09 00 * **Spark plug wrench 5/8" (15.8 mm) 175 mm long** 3/8" square drive	15	A	–	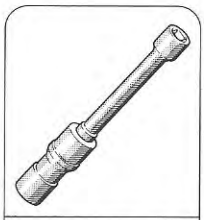 119 589 01 09 00 **15**
140 589 01 33 00 * **Mounting lever** for modules in module box	54	A	–	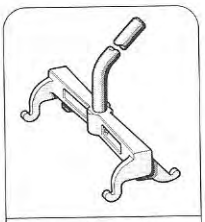 140 589 01 33 00 **07**
140 589 14 63 00 **Adapter for impulse plug** for adapting diagnosis socket to impulse counter	54	B	06	140 589 14 53 00

courtesy of 500Eboard.com

The following is the ASR test program. It is an extract from the Diagnosis Manual and is only valid until the test is published in the Diagnosis Manual Chassis.

5.2 Model 124.036

	Page
Diagnosis	**1**
Fault memory	11/1
Fault tracing chart	12/1
Test program - Electrics	**2**
Arrangement of components	21/1
Prerequisite for testing	22/1
Testing	23/1

courtesy of 500Eboard.com

5.2 Model 124.036

	Page
Diagnosis	**1**
Fault memory	11/1
Fault tracing chart	12/1
Test program - Electrics	**2**
Arrangement of components	21/1
Prerequisite for testing	22/1
Testing	23/1

courtesy of 500Eboard.com

Diagnosis – Fault memory

Preconditions for reading out fault memory

1. Connect impulse counter and adapter diagnosis socket to diagnosis test coupling 38-pole (X11/4) according to connection diagram.
2. Read out fault memory for control unit ABS/ASR (N30/1).

Special tools

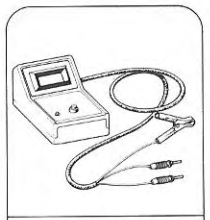

124 589 19 21 00

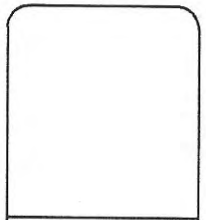

140 589 14 63 00

courtesy of 500Eboard.com

Diagnosis – Fault memory

Connection diagram impulse counter

Connect yellow line for reading out the impulse output control unit ABS/ASR (N30/1) to jack 6 of adapter diagnosis socket (075).

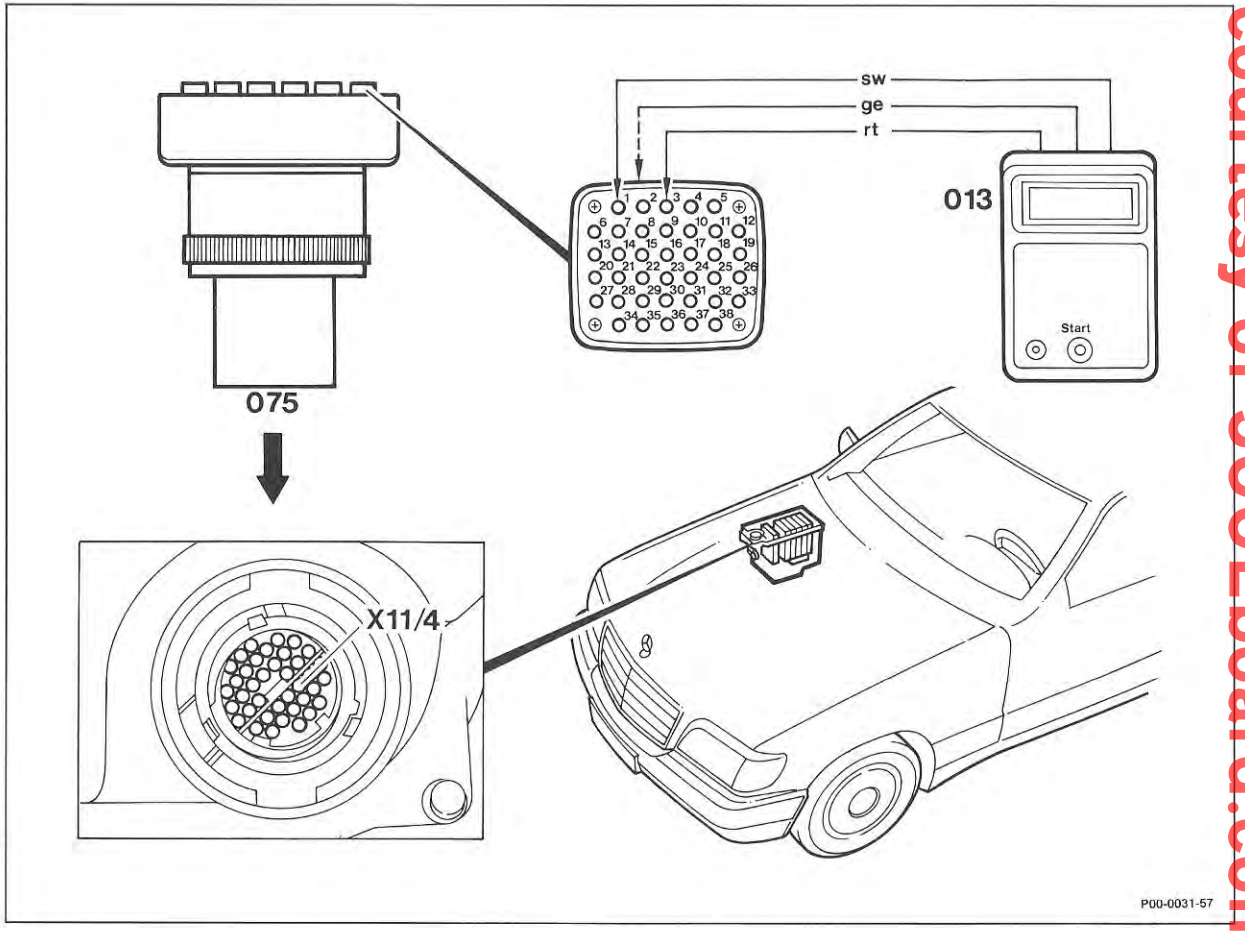

Fig. 1

013	Impulse counter
075	Adapter diagnosis socket
X11/4	Diagnosis test coupling 38-pole (impulse signal)

courtesy of 500Eboard.com

Diagnosis – Fault memory

Impulse display	Possible cause	Remedy/Test step [1])
1	No fault recognized	–
2	Speed sensor front axle left (L6/1)	☐ 23 ⇒ 12.0
3	Speed sensor front axle right (L6/2)	☐ 23 ⇒ 14.0
4	Speed sensor rear axle left (L6/3)	☐ 23 ⇒ 16.0
5	Speed sensor rear axle right (L6/4)	☐ 23 ⇒ 18.0
6	Solenoid valve front axle left (A7/3y1)	☐ 23 ⇒ 21.0
7	Solenoid valve front axle right (A7/3y2)	☐ 23 ⇒ 22.0
8	Solenoid valve rear axle left (A7/3y3)	☐ 23 ⇒ 23.0
9	Solenoid valve rear axle right (A7/3y4)	☐ 23 ⇒ 24.0
10	Relay return feed pump/charge pump (A7/3k2), return feed pump/charge pump (A7/3m1)	☐ 23 ⇒ 8.0
11	Relay solenoid valve (A7/3k1)	☐ 23 ⇒ 7.0
13	Brake light switch ADS/ASR (S9/1)	☐ 23 ⇒ 9.0

1) Note prerequisites left for testing.

courtesy of 500Eboard.com

Diagnosis – Fault memory

Impulse display	Possible cause	Remedy/Test step [1])
15	Control unit ABS/ASR (N30/1)	Renew N30/1
16	Speed sensor (L6/1, L6/2, L6/3, L6/4) wrong number of teeth or dirty or damaged	Clean or renew speed sensor or rotor/visual inspection.
17	Undervoltage on relay solenoid valve (A7/3k1)	☐ 23 ⇒ 7.0
20	Change-over solenoid valve (A7/3y5)	☐ 23 ⇒ 25.0
21	Pressure switch (A7/3s1) charge	☐ 23 ⇒ 20.0
22	Pressure switch (A7/3s1) leakage	☐ 23 ⇒ 20.0
23	Pressure switch (A7/3s1) hydraulic	☐ 23 ⇒ 20.0
24	Precharging pump ASR (M15)	Check lines or M15
30	CAN data line to control unit electronic accelerator (EFP) N4/1	Check for interruption
31	CAN data line to hot wire air control unit (LH) N3/1 or hot wire air control unit (LH) left N3/2	Check for interruption
32	CAN data line to EZL LH control unit (N1/4, N1/5, N1/6)	Check for interruption
33	CAN data line, short circuit	Check for short circuit

1) Observe prerequisites for testing.

courtesy of 500Eboard.com

Test program – Electrics Prerequisites for testing

Connection diagram contact box

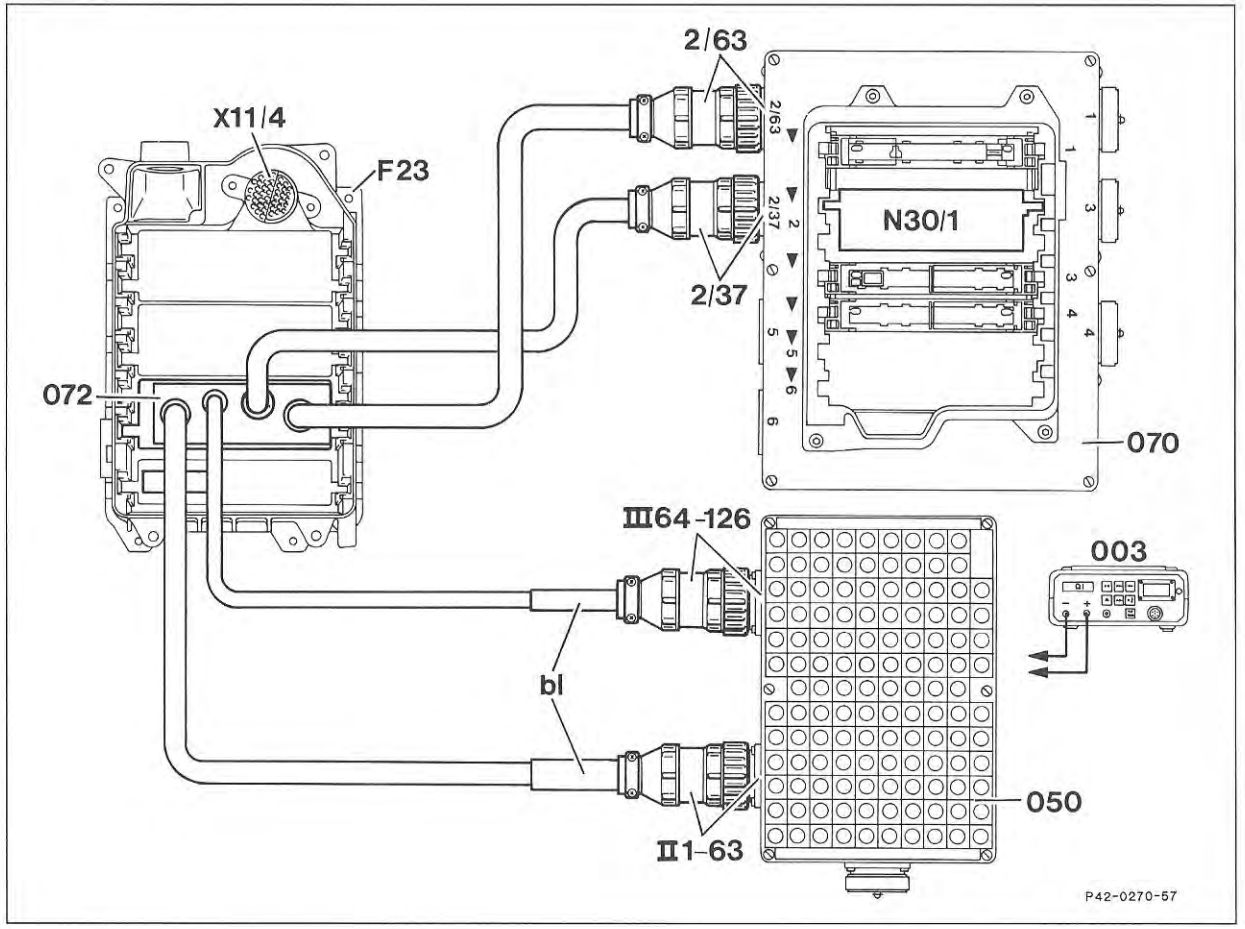

Fig. 1

003	Multimeter
050	Contact box 126-pole
070	Contact box
072	Contact module 2
F23	Module box
N30/1	Control unit ABS/ASR
X11/4	Diagnosis test coupling 38-pole (impulse signal)
bl	blue

courtesy of 500Eboard.com

Test program – Electrics Prerequisites for testing

Preceding operation:
Diagnosis - Fault memory ..... Chapter 11

Prerequisites for testing

1. Ignition: **OFF**
2. Remove control unit ABS/ASR (N30/1).
3. Connect contact box with contact module 2 and contact box according to connection diagram.

See "Electrical wiring diagrams Model 124.036, Volume 4"
Designation: Function group
Model 124.036

Explanation of column Measuring device/Test connection

The figures in brackets such as ⇒ 1.0 (1.27) mean:
1 = Coupling 1
27 = Jack 27 in wiring diagram

Special tools

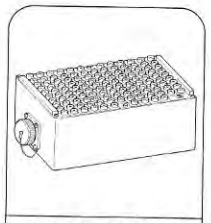
129 589 00 21 00
54


140 589 02 63 00


201 589 00 99 00

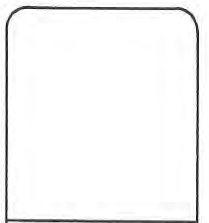
140 589 06 63 00

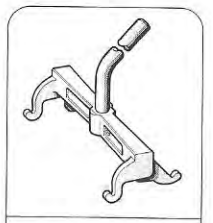
140 589 01 33 00
07

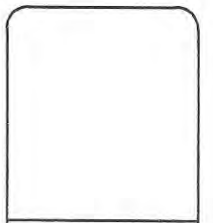
140 589 16 33 00

Commercially available tools

Multimeter	e.g. Sun, DMM-5

courtesy of 500Eboard.com

courtesy of 500Eboard.com

Test program – Electrics

Arrangement of components

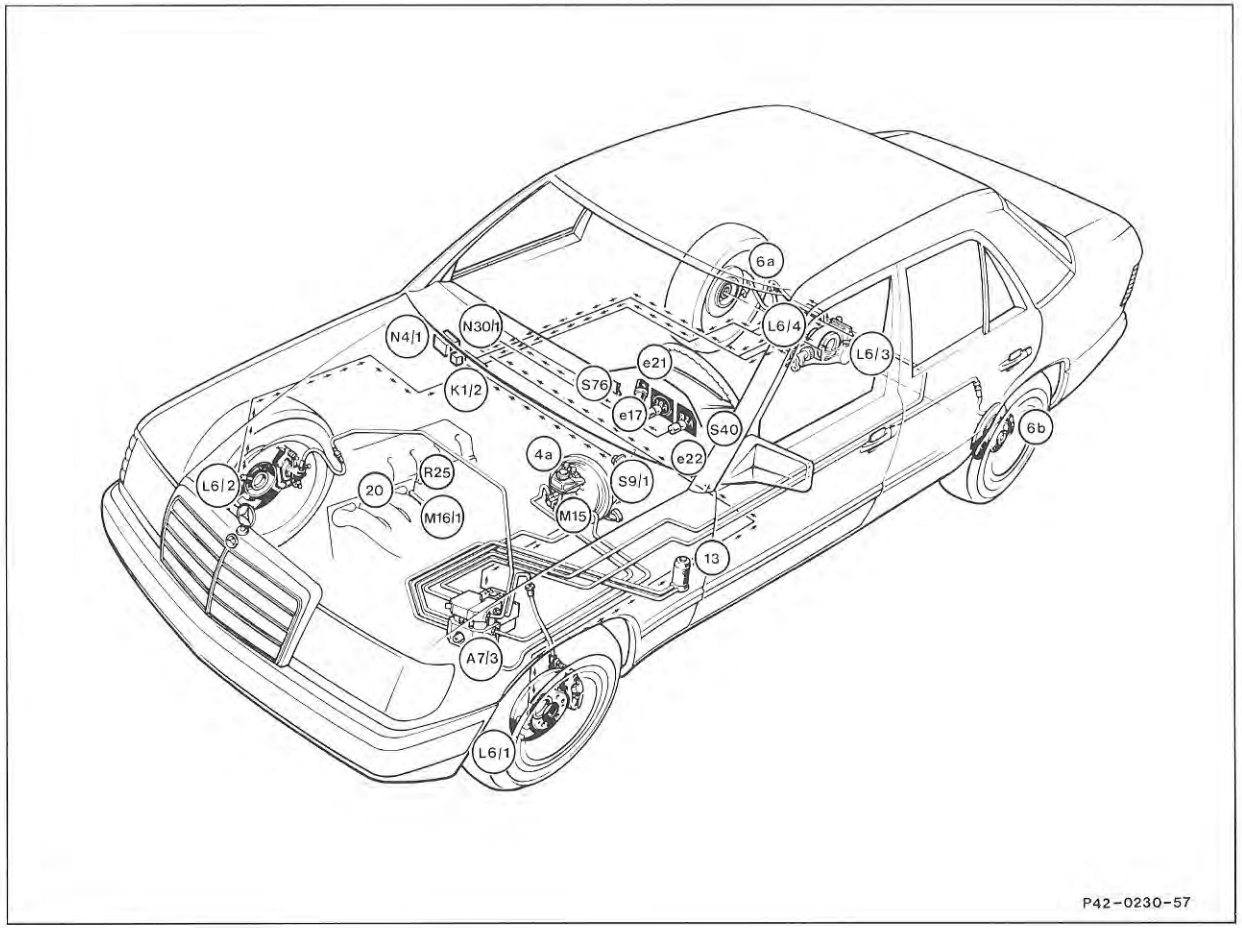

Fig. 1

A1	Instrument cluster
A1e17	ABS indicator
A1e21	Function display ASR
A1e22	Indicator lamp ASR
A7/3	Hydraulic unit ABS/ASR
L6/1	Speed sensor front axle left
L6/2	Speed sensor front axle right
L6/3	Speed sensor rear axle left
L6/4	Speed sensor rear axle right
M15	Precharging pump ASR
N30/1	Control unit ABS/ASR
S76	Skid shaft switch ASR
X11/4	Diagnosis test coupling 38-pole (impulse signal)

Diagnosis - Fault tracing chart

Complaint	Possible cause	Remedy/Test step
Indicator lamp ASR or ABS lights up with engine running.		Read out fault memory ☐ 11
Indicator lamp ASR or ABS lights up while driving and stays on.		Read out fault memory ☐ 11
Indicator lamp ASR or ABS lights up while driving and goes out again.	On-board voltage < 11 V, too many electrical users in operation.	Check alternator (G2), read out fault memory ☐ 11
Indicator lamp ABS fails to light up with ignition switched on.		☐ 23 ⇒ 2.0
Indicator lamp ASR fails to light up with ignition switched on.		☐ 23 ⇒ 3.0

courtesy of 500Eboard.com

Test program – Electrics Testing

Test step / Impulse display	Scope of test	Measuring device/Test connection	Actuation/Precondition	Set value	Possible cause/Remedy
⇒ 3.0	**Indicator lamp ASR (A1e22)**	N30/1 40 (2.40) — V — 70 (1.29)	Ignition: **ON** Engine: **Start**	< 2 V A1e22: **ON** 10–14 V A1e22: **OFF**	A1e22, ⇒ 3.1 Read out fault memory □ 11, lines, control unit ABS/ASR (N30/1)
⇒ 3.1	Diode in relay solenoid valve (A7/3k1)		Engine: **OFF** Disconnect ABS/ASR (N30/1) control unit from contact box. Ignition: **ON** Engine: **Start**	Indicator lamp ASR (A1e22): **ON** A1e22: **ON**	Lines, A7/3k1
⇒ 4.0	**Function display ASR (A1e21)**	N30/1 78 (1.37) — V — 68 (1.27)	Ignition: **ON** Engine: **Start**	A1e21: **ON** 10–14 V A1e21: **OFF** < 2 V	Lines, A1e21 Lines

courtesy of 500Eboard.com

Test program – Electrics Testing

Test step / Impulse display	Scope of test	Measuring device/Test connection	Actuation/Precondition	Set value	Possible cause/Remedy
⇒ 5.0	**Diagnosis output**	N30/1 40 (2.40) — V — 57 (1.16)	Ignition: **ON**	11–14 V	Lines, Control unit ABS/ASR (N30/1)
⇒ 6.0	**Voltage terminal 61**	N30/1 40 (2.40) — V — 66 (1.25)	Ignition: **ON** Engine: **Start**	< 1 V 11–14 V	Lines, alternator (G2)
⇒ 7.0 *11* *17*	**Relay solenoid valve (A7/3k1)** Activation	N30/1 27 (2.27) — V — 7 (2.7)	Ignition: **ON**	10–14 V	Fault stored ☐ 11 (eliminate read-out fault) ⇒ 7.1, ⇒ 7.2, Lines
	Monitoring feature	N30/1 40 (2.40) — V — 1 (2.1) 40 (2.40) — V — 21 (2.21) 40 (2.40) — V — 22 (2.22)		11–14 V	⇒ 7.3, Lines

courtesy of 500Eboard.com

Test program – Electrics Testing

Test step / Impulse display	Scope of test	Measuring device/Test connection	Actuation/Precondition	Set value	Possible cause/Remedy
⇒ 7.1	Voltage supply	N30/1 40 (2.40) — V — 7 (2.7)	Ignition: **ON**	11–14 V	Lines, ⇒ 1.0, control unit ABS/ASR (N30/1)
⇒ 7.2	Coil resistance	N30/1 27 (2.27) — Ω — 7 (2.7)	Ignition: **OFF** Disconnect control unit ABS/ASR (N30/1) from contact box.	40–80 Ω	Lines, relay solenoid valve (A7/3k1)
⇒ 7.3	Working contact	W14 — Ω — N30/1 1 (2.1)	Ignition: **OFF** Disconnect control unit ABS/ASR (N30/1) from contact box.	< 1 Ω	Lines, relay solenoid valve (A7/3k1)

courtesy of 500Eboard.com

Test program – Electrics Testing

Test step / Impulse display	Scope of test	Measuring device/Test connection	Actuation/Precondition	Set value	Possible cause/Remedy
⇒ 8.0 *10*	**Relay return feed pump/charging pump (A7/3k2)** Voltage supply	N30/1 40 (2.40) — (V) — 7 (2.7)	Ignition: **ON**	11–14 V	Lines, ⇒ 7.1, ⇒ 8.1, return feed pump/charging pump (A7/3m1)
⇒ 8.1	Coil resistor	N30/1 28 (2.28) — (Ω) — 7 (2.7)	Ignition: **OFF** Disconnect control unit ABS/ASR (N30/1) from contact box.	40–80 Ω	Lines, return feed pump/charging pump (A7/3k2)
⇒ 9.0 *13*	**Brake light switch ASD/ASR (S9/1)** Normally open contact	N30/1 40 (2.40) — (V) — 49 (1.8)	Ignition: **ON** Do **not** actuate brake Actuate brake	<1 V 11–14 V	Lines, S9/1
	Normally closed contact	N30/1 40 (2.40) — (V) — 45 (1.4)	Do **not** actuate brake Actuate brake	11–14 V <1 V	

courtesy of 500Eboard.com

Test program – Electrics Testing

Test step / Impulse display	Scope of test	Measuring device/Test connection	Actuation/Precondition	Set value	Possible cause/Remedy
⇒ 10.0	**Switch parking brake indicator (S12)**	N30/1 47 (1.6) — V — 68 (1.27)	Ignition: **ON** Actuate parking brake Do **not** actuate parking brake	Indicator parking brake (A1e7): **ON** 11–14 V Indicator parking brake (A1e7): **OFF** <1 V	Lines, A1e7 Lines
⇒ 11.0	**Skid shaft switch ASR (S76)**	N30/1 40 (2.40) — V — 55 (1.14)	Engine: **Start** Keep S76 pressed in position: **ON.** Keep S76 pressed in position: **OFF.**	11–14 V Function display in S76: **ON** <1 V Function display in S76: **OFF**	Lines, S76, control unit ABS/ASR (N30/1)

courtesy of 500Eboard.com

Test program – Electrics Testing

Test step / Impulse display	Scope of test	Measuring device/Test connection	Actuation/Precondition	Set value	Possible cause/Remedy
⇒ 12.0 2	**Speed sensor front axle (L6/1) left**	N30/1 10 (2.10) — V — 30 (2.30)	Lift vehicle front Ignition: **ON** Turn wheel front left by hand.	>0,1 V ~	⇒ 12.1, ⇒ 12.2
⇒ 12.1	Insulation resistance	N30/1 40 (2.40) — Ω — 30 (2.30)	Ignition: **OFF** Disconnect control unit ABS/ASR (N30/1) from contact box.	>20 kΩ	Lines,
⇒ 12.2	Inner resistance	N30/1 10 (2.10) — Ω — 30 (2.30)	Ignition: **OFF** Disconnect control unit ABS/ASR (N30/1) from contact box.	0,8–2,3 kΩ	Lines, speed sensor front axle (L6/1) left

courtesy of 500Eboard.com

Test program – Electrics Testing

Test step / Impulse display	Scope of test	Measuring device/Test connection	Actuation/Precondition	Set value	Possible cause/Remedy
⇒ 13.0	**Speed sensor output front left**	N30/1 40 (2.40) — (V) — 77 (1.36)	Raise vehicle front Ignition: **ON** Turn wheel front left by hand.	>3 V ~	Lines, ⇒ 12.0, ⇒ 13.1 control unit ABS/ASR (N30/1)
⇒ 13.1	Load by connected control units	N30/1 40 (2.40) — (Ω) — 77 (1.36)	Ignition: **OFF** Disconnect control unit ABS/ASR (N30/1) from contact box.	>5 kΩ	Lines, connected control units (N4/1, N4/3, N10/2, N22 and A2, A2/3y as applicable).
⇒ 14.0 3	**Speed sensor front axle right (L6/2)**	N30/1 13 (2.13) — (V) — 34 (2.34)	Raise vehicle front Ignition: **ON** Turn wheel front left by hand.	>0,1 V ~	⇒ 14.1, ⇒ 14.2
⇒ 14.1	Insulation resistance	N30/1 40 (2.40) — (Ω) — 34 (2.34)	Ignition: **OFF** Disconnect control unit ABS/ASR (N30/1) from contact box.	>20 kΩ	Lines

courtesy of 500Eboard.com

Test program – Electrics Testing

Test step / Impulse display	Scope of test	Measuring device/Test connection	Actuation/Precondition	Set value	Possible cause/Remedy
⇒ 14.2	Inner resistance	N30/1 13 (2.13) — Ω — 34 (2.34)	Ignition: **OFF** Disconnect control unit ABS/ASR (N30/1) from contact box.	0,8-2,3 kΩ	Lines, speed sensor front axle right (L6/2)
⇒ 15.0	**Speed sensor output front right**	N30/1 40 (2.40) — V~ — 79 (1.38)	Lift vehicle front Ignition: **ON** Turn wheel front right by hand.	>3 V ~	Lines, ⇒ 14.0, ⇒ 15.1 control unit ABS/ASR (N30/1)
⇒ 15.1	Load by connected control units	N30/1 40 (2.40) — Ω — 79 (1.38)	Ignition: **OFF** Disconnect control unit ABS/ASR (N30/1) from contact box.	>5 kΩ	Lines, connected control units (N16/1, N51, N30/2 as applicable).
⇒ 16.0 *4*	**Speed sensor rear axle left (L6/3)**	N30/1 73 (1.32) — V~ — 74 (1.33)	Lift vehicle rear Ignition: **ON** Turn wheel rear left by hand.	>0,1 V ~	⇒ 16.1, ⇒ 16.2

courtesy of 500Eboard.com

Test program – Electrics Testing

Test step / Impulse display	Scope of test	Measuring device/Test connection	Actuation/Precondition	Set value	Possible cause/Remedy
⇒ 16.1	Insulation resistance	N30/1 40 (2.40) — Ω — 74 (1.33)	Ignition: **OFF** Disconnect control unit ABS/ASR (N30/1) from contact box.	>20 kΩ	Lines
⇒ 16.2	Inner resistance	N30/1 73 (1.32) — Ω — 74 (1.33)	Ignition: **OFF** Disconnect control unit ABS/ASR (N30/1) from contact box.	0,6–1,6 kΩ	Lines, speed sensor rear axle left (L6/3)
⇒ 17.0	**Speed sensor output rear left**	N30/1 40 (2.40) — V — 69 (1.28)	Lift vehicle rear Ignition: **ON** Turn wheel rear left by hand.	>3 V ~	Lines, ⇒ 16.0, ⇒ 17.1, control unit ABS/ASR (N30/1)
⇒ 17.1	Load by connected control units	N30/1 40 (2.40) — Ω — 69 (1.28)	Ignition: **OFF** Disconnect control unit ABS/ASR (N30/1) from contact box.	>5 kΩ	Lines, connected control units (N4/3, N30/2, N49/1 as applicable).

courtesy of 500Eboard.com

Test program – Electrics Testing

Test step / Impulse display	Scope of test	Measuring device/Test connection	Actuation/Precondition	Set value	Possible cause/Remedy
⇒ 18.0 5	**Speed sensor rear axle right (L6/4)**	N30/1 71 (1.30) — V — 72 (1.31)	Lift vehicle rear Ignition: **ON** Turn wheel rear right by hand.	>0,1 V ~	⇒ 18.1, ⇒ 18.2
⇒ 18.1	Insulation resistance	N30/1 40 (2.40) — Ω — 72 (1.31)	Ignition: **OFF** Disconnect control unit ABS/ASR (N30/1) from contact box.	>20 kΩ	Lines
⇒ 18.2	Inner resistance	N30/1 71 (1.30) — Ω — 72 (1.31)	Ignition: **OFF** Disconnect control unit ABS/ASR (N30/1) from contact box.	0,6–1,6 kΩ	Lines, speed sensor rear axle right (L6/4)
⇒ 19.0	**Speed sensor output rear right**	N30/1 40 (2.40) — V — 67 (1.26)	Lift vehicle rear Ignition: **ON** Turn wheel rear right by hand.	>3 V ~	⇒ 18.0, ⇒ 19.1 Control unit ABS/ASR (N30/1)

courtesy of 500Eboard.com

Test program – Electrics Testing

Test step / Impulse display	Scope of test	Measuring device/Test connection	Actuation/Precondition	Set value	Possible cause/Remedy
⇒ 19.1	Load by connected control units	N30/1 40 (2.40) — Ω — 67 (1.26)	Ignition: **OFF** Disconnect control unit ABS/ASR (N30/1) from contact box.	>5 kΩ	Lines, connected control units (N4/3, N30/2, N49/1 as applicable).
⇒ 20.0 *21* *22* *23*	**Pressure switch (A7/3s1)**	N30/1 37 (2.37) — V — 68 (1.27)	Ignition: **ON** Pressure storage unit: charged Bleed pressure storage unit on connection "SP" for max. 2 s	9–14 V <3 V	⇒ 20.1, pressure storage unit not charged Lines, hydraulic unit ABS/ASR (A7/3)
⇒ 20.1	Pressure switch	N30/1 W14 — Ω — 37 (2.37)	Ignition: **OFF** Disconnect control unit ABS/ASR (N30/1) from contact box. Pressure storage unit: **charged** Pressure storage unit: **bled**	 1,8 kΩ >20 Ω	Lines, hydraulic unit ABS/ASR (A7/3), ⇒ 27.0

courtesy of 500Eboard.com

Test program – Electrics Testing

Test step / Impulse display	Scope of test	Measuring device/Test connection	Actuation/Precondition	Set value	Possible cause/Remedy
⇒ 21.0 / 6	**Solenoid valve front axle left (A7/3y1)** Inner resistance	N30/1 20 (2.20) — Ω — 21 (2.21)	Ignition: **OFF** Disconnect control unit ABS/ASR (N30/1) from contact box.	0,7–2,2 Ω	Lines, hydraulic unit ABS/ASR (A7/3)
⇒ 22.0 / 7	**Solenoid valve front axle right (A7/3y2)** Inner resistance	N30/1 39 (2.39) — Ω — 21 (2.21)	Ignition: **OFF** Disconnect control unit ABS/ASR (N30/1) from contact box.	0,7–2,2 Ω	Lines, hydraulic unit ABS/ASR (A7/3)
⇒ 23.0 / 8	**Solenoid valve rear axle left (A7/3y3)**	N30/1 2 (2.2) — Ω — 21 (2.21)	Ignition: **OFF** Disconnect control unit ABS/ASR (N30/1) from contact box.	0,7–2,2 Ω	Lines, hydraulic unit ABS/ASR (A7/3)
⇒ 24.0 / 9	**Solenoid valve rear axle left (A7/3y4)**	N30/1 24 (2.24) — Ω — 21 (2.21)	Ignition: **OFF** Disconnect control unit ABS/ASR (N30/1) from contact box.	0,7–2,2 Ω	Lines, hydraulic unit ABS/ASR (A7/3)

courtesy of 500Eboard.com

Test program – Electrics Testing

Test step / Impulse display	Scope of test	Measuring device/Test connection	Actuation/Precondition	Set value	Possible cause/Remedy
⇒ 25.0 *20*	**Change-over solenoid valve (A7/3y5)** Inner resistance	N30/1 5 (2.5) — Ω — 21 (2.21)	Ignition: **OFF** Disconnect control unit ABS/ASR (N30/1) from contact box.	1.8–2.8 Ω	Lines, hydraulic unit ABS/ASR (A7/3)

courtesy of 500Eboard.com

Test program – Electrics Testing

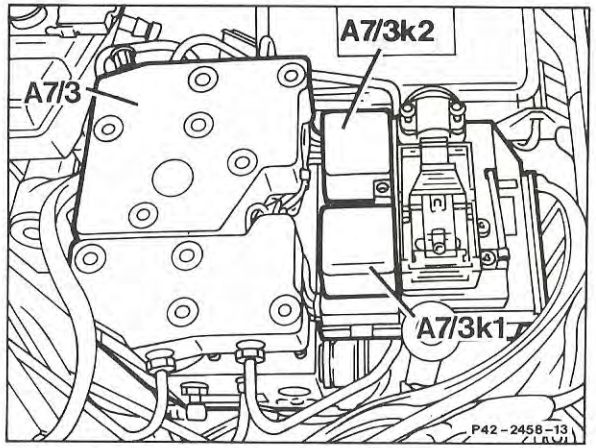

Fig. 1

A7/3k1 Relay solenoid valve

A7/3k2 Relay return feed pump/charging pump

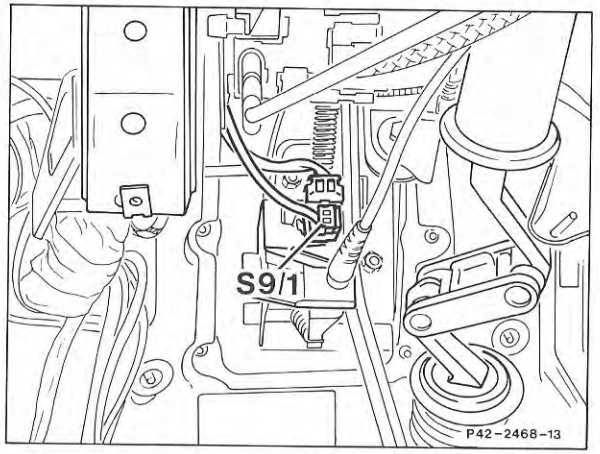

Fig. 2

S9/1 Brake light switch ASD/ASR

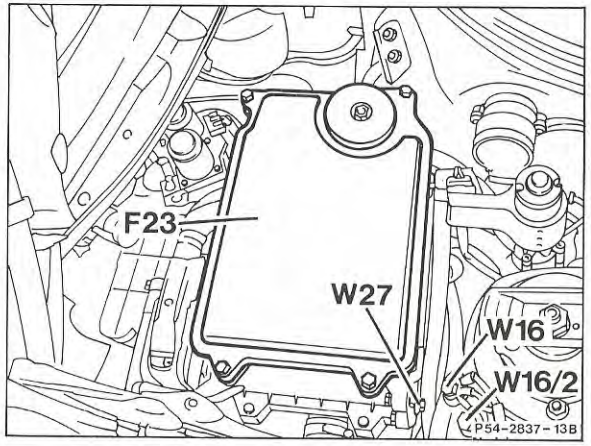

Fig. 3

W16 Ground unit compartment

W27 Ground module box bracket

courtesy of 500Eboard.com

Test program – Electrics Testing

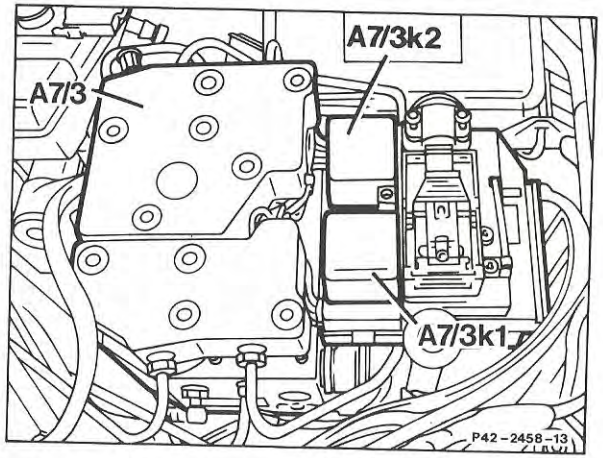

Fig. 1

A7/3k1 Relay solenoid valve

A7/3k2 Relay return feed pump/charging pump

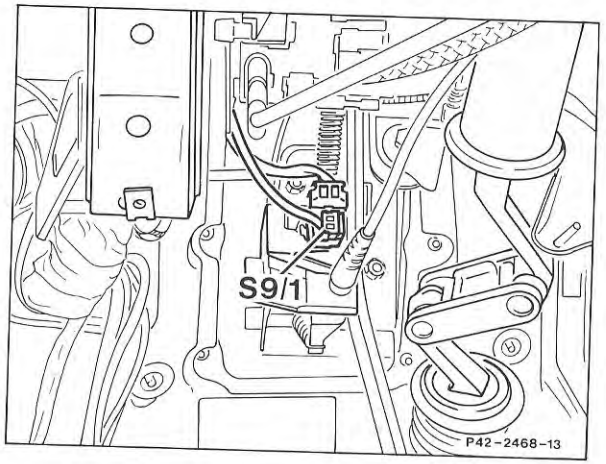

Fig. 2

S9/1 Brake light switch ASD/ASR

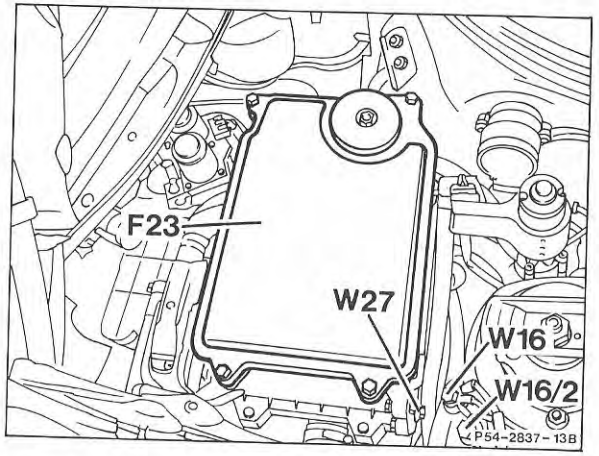

Fig. 3

W16 Ground unit compartment

W27 Ground module box bracket

courtesy of 500Eboard.com

Test program – Electrics Testing

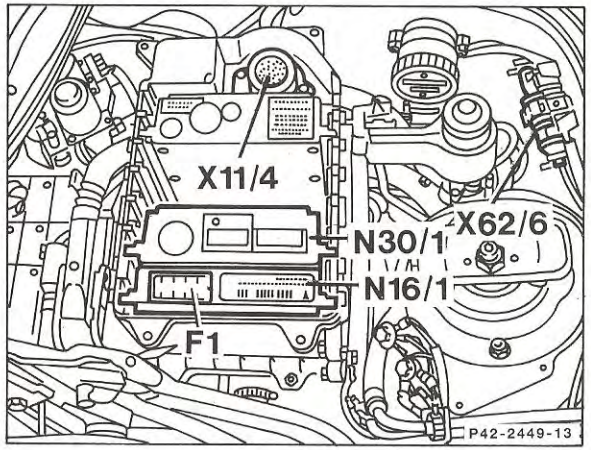

Fig. 4

N16/1 Control unit basic module (GM), F1 Fuse ABS/ASR

N30/1 Control unit ABS/ASR

X11/4 Diagnosis test coupling 38-pole (impulse signal)

X62/6 Connector front axle distributor right unit compartment

X62/7 Connector front axle distributor left unit compartment (arranged in mirror image)

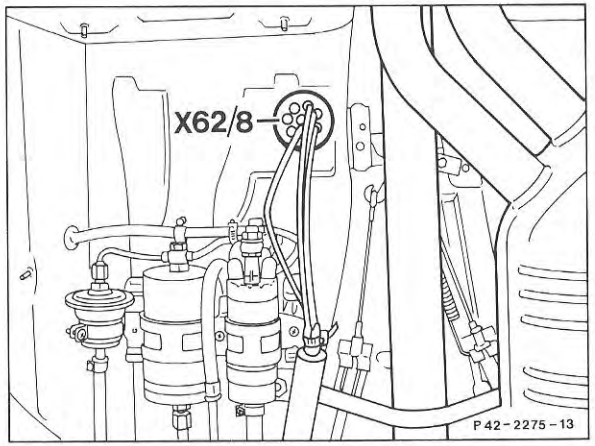

Fig. 5

X62/8 Connector rear axle distributor

courtesy of 500Eboard.com